LOREX
VIEW YOUR WORLD™

COMPLETE WIRELESS SECURITY CAMERA SYSTEM

WATCH OVER YOUR WORLD—
FROM ANYWHERE IN THE WORLD.

AFFORDABLE SURVEILLANCE SOLUTION, IDEAL FOR YOUR HOME

INCLUDES

- 4 CHANNELS
- 2 CAMERAS
- 500 GB STORAGE
- 13.3" LED MONITOR
- INTERNET SETUP WIZARD

- COMPLETE WIRELESS SURVEILLANCE SOLUTION
- INSTANT MOBILE VIEWING FEED
- CLEAR VIDEO DAY & NIGHT
- VERSATILE INDOOR & OUTDOOR DESIGN
- SAVE ON INSTALLATION TIME & COST

VANTAGE

LH110CW SERIES

www.lorextechnology.com

COMPLETE WIRELESS SECURITY CAMERA SYSTEM

SECURE WIRELESS VIEWING

Watch the multi-screen monitor while you record on the DVR 24/7 uninterrupted.

COMPLETE SOLUTION

No need to run video cables. Simply install the cameras near a power outlet[1], and move the cameras from one location to another depending on your monitoring needs.

SMART PHONE STREAMING

User friendly Apps and instant e-mail alerts.

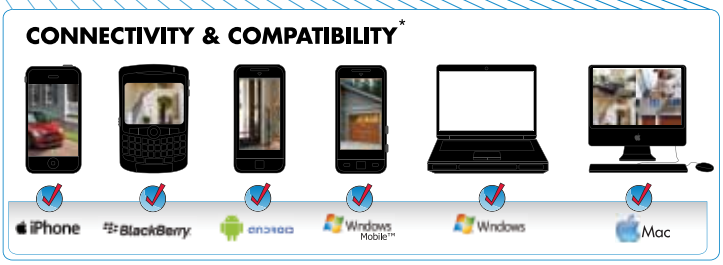

For the latest smart phone compatibility list & free App download† check www.lorextechnology.com

DIGITAL VIDEO RECORDER:

- H.264 video compression[2]
- Real time recording @ 360 x 240 resolution
- Pentaplex operation - View, Record, Playback, Back Up & Remotely Control the system simultaneously
- 24/7 100% Duty cycle hard drive pre-installed

LED MONITOR:

- 13.3″ Monitor (VGA) with LED back-light technology
- Resolution: 1366 x 768 pixels

CONNECTIVITY:

- Instant Mobile Viewing on compatible Smart phones†
- Exclusive LOREX Easy Connect Internet Set-up Wizard [3]
- PC & Mac compatible[4]
- Free LOREX DDNS (Dynamic Domain Name Service) for advanced remote connectivity at all times
- Instant email alerts

VANTAGE

LH110CW SERIES

COMPLETE WIRELESS SECURITY CAMERA SYSTEM

DIGITAL WIRELESS GENERAL FEATURES:

- Digital wireless secure and interference-free video signal
- Use cameras indoor or outdoor [5], day or night. Night viewing up to 60ft (18m) [6]
- Wireless Range: Up to 150ft (46m) indoor/450ft (137m) outdoor [7]
- Simple installation. No video cables required. Camera and receiver require a wired connection to an electrical outlet (power adaptors included)
- Connect multiple receivers to your surveillance recorder (DVR) to create a wireless surveillance solution[8]
- Auto infrared light filter (IR Cut Filter) ensures accurate color reproduction in all lighting conditions
- Adjustable resolution: VGA (640x480 @ 12 fps) for high quality video or QVGA (320x240 @ 30fps) for real time observation

CAMERAS WITH AUTO-MECHANICAL INFRARED FILTERING TECHNOLOGY

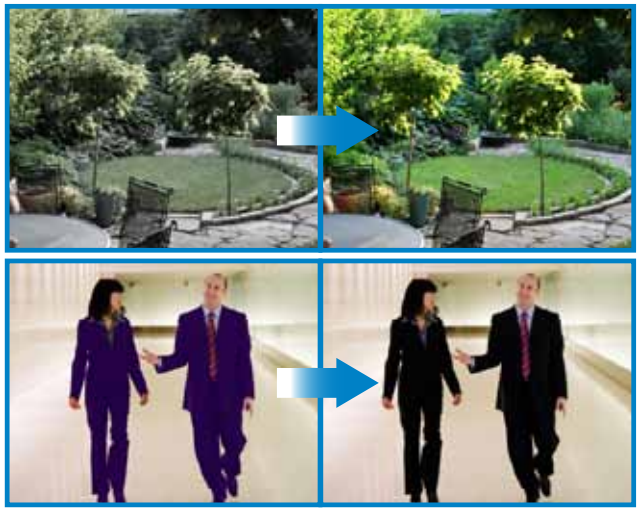

Accurate color reproduction in varying lighting conditions

HOW IT WORKS

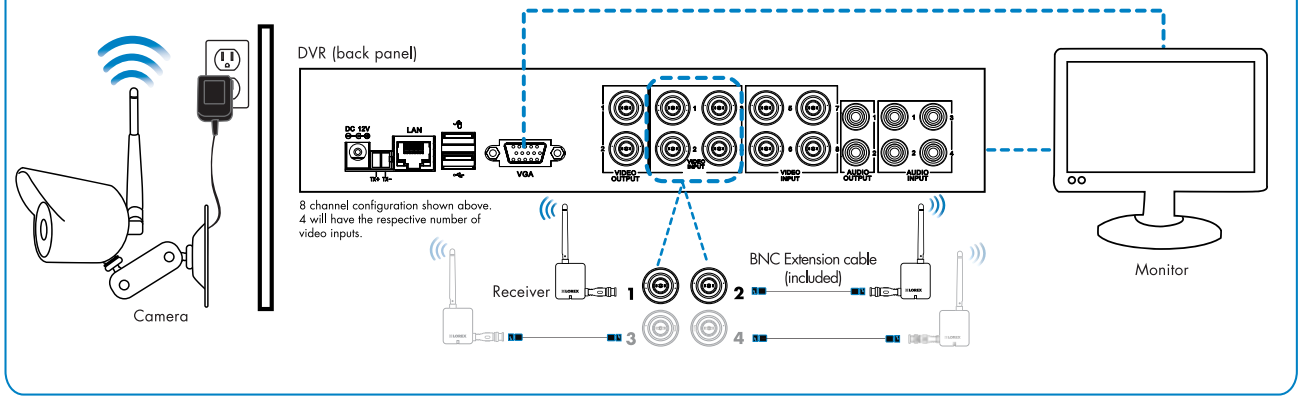

VANTAGE

LH110CW SERIES

www.lorextechnology.com

DVR , MONITOR & DIGITAL WIRELESS SPECIFICATIONS

DVR:

SYSTEM	
Operating System	Linux (embedded)
Pentaplex	Simultaneous View, Record, Playback, Backup & Remote Monitoring
Number of Channels	**4** Channel
Inputs/Outputs	
Video IN	4 x 1Vp-p, CVBS, 75ohms, BNC/DIN
Video OUT	2 x BNC
VGA OUT	Yes
Audio IN	4 Line in(RCA), ADPCM(4&8 ch)
Audio OUT	2 line out(RCA), ADPCM(4&8 ch)
USB Port	2 at the back
PTZ control	RS-485 Pelco D & P Protocol
Display	
Live Display	**4 ch:** 1,4
Live Display Speed	120 (4 ch) NTSC
	100 (4 ch) PAL
OSD	ON/OFF
System Navigation	USB Mouse, IR Remote Controller, Front Panel
Motion Area Setting	Adjustable grid (10 x15) NTSC Adjustable grid (12 x15) PAL
Sensitivity levels	8
Firmware Upgrade	Via USB device
User Authority	By user group
Time Synchronization	Auto time sync by NTP server
RECORDING	
Video Compression	H.264
Audio Compression	ADPCM
Recording Resolution	NTSC: 360x240 (CIF), 720x240 (HD1), 720x480 (D1) PAL: 360x288 (CIF), 720x288 (HD1), 720x576 (D1)
Recording Speed:	**4 ch:** 120/100 (NTSC/PAL) @ CIF, 60/50(NTSC/PAL) @ HD1, 30/25 (NTSC/PAL) @ D1
Recording Resolution Setting	Per camera for different resolutions (CIF/2CIF/D1)
Recording Quality Control	3 levels
Image Size	768-1536 Kbyte (D1), 512-768 Kbyte (HD1) , 384-512 Kbyte (CIF)
Recording Schedule	By hour, by day, by recording mode, by alarm, by ch
Pre Recording	Max. 10 Secs
Post Recording	Max. 5 Minutes
Reliability	Watch-Dog, Auto-recovery after power failure
Covert Video	Yes

LED MONITOR:

Display Device:	13.3 inch color TFT LED
Resolution:	1366 (H)*768 (V)
Dots Distance:	0.2148(H) X 0.2148(V)mm
Visible Range:	293.42(H) X164.97(V)mm
Power Source:	AC adaptor (normal: DC 12V – 800mA)
Power Consumption:	¡9.6W
Operation Temperature :	-5° C to +45° C.
Unit Dimensions:	13.1"/335mm W x 11.2"/285mm H x 1.3"/35mm D
Unit Weight (KGs).	0.926 Kg / 2.04 lbs

DIGITAL WIRELESS GENERAL SPECS:

Transmission Frequency:	ISM 2,400~2,480 MHz
Transmission Power:	16dBm
Unobstructed Effective Range:	450ft / 137m Outdoor / 150ft / 46m Indoor
Spread Spectrum:	FHSS
Modulation Mode:	GFSK
Operating Temperature:	14 ~ 122° Fahrenheit / - 10 ~ +50° Celsius
Operating Humidity:	30~90% RH

PLAYBACK	
Playback Channel	1,4 (4 ch)
Playback Speed	Variable Max 16x
Playback Players	Backup Player
Search	By time & event
Log Search	Up to 10,000 lines for user login/out, configuration changes, remote access, connects/disconnects
Audio Play	Yes
STORAGE & ARCHIVE	
Storage	**4 :** Up to 1 HDD's (SATA)
Maximum Capacity	**4 ch:** Up to 2TB
Backup Media	USB Flash Drive & HDD
Backup File Format	H.264 file (AVI generator included)
CONNECTIVITY	
Easy Connect	Lorex Auto Port Forward Wizard
Supported Operating Systems	**Windows**™ XP, Vista, 7 **Mac** OSX Snow Leopard 10.6
Browsers	Internet Explorer & Safari 5.0
Email notification	Text with snapshot
Instant Smart Phone Compatibility†	Instant Smart Phone Compatibility on iPhone™, BlackBerry (supported model numbers: 9700, 9000), Android (version 1.5 & above), Window Mobile (6.0, 6.5), Symbian 3rd & 5th generation phones.
DDNS	Free Lorex DDNS
System Configuration	Full setup configuration over network
Ports	Programmable by User
Network Protocol	LAN, DHCP, Dynamic IP, DDNS
Network Interface	10/100-Base-TX, RJ-45
Network Speed Control	48Kb ~ 8MB/sec.
GENERAL	
Power Consumption	**4 ch:** Approx. 10 watts
Supply Voltage	**4 ch:** 100VAC-240VAC, 12VDC , 3A, 50/60Hz
Unit Dimensions	**4 ch:**11.81"/300mm x 8.66"/220mm x (W x D x H) 1.97"/50mm
Unit Weight (KGs)	**4 ch:** 1.7 kg/3.75 Lbs
Operating temperature	32° ~ 104° F / 0° ~ 40° C
Humidity	10 ~ 90% NC

WIRELESS CAMERA:

Imaging Sensor Type:	CMOS
Picture Total Pixels:	640 x 480pxl (NTSC)
Minimum Illumination:	0 Lux (IR on)
Night Vision Distance:	60ft / 18m
Lens:	5.1mm, F2.8
View Angle:	Diagonal 48°
Consumption Current (Max.):	200mA
Power Supply:	12V DC
Environment Rating (Ingress):	IP66
Dimensions (W x D x H):	75mm x 120mm x 220mm / 3.0" x 4.8" x 8.7" (with antenna)
Weight:	0.3kg / 0.6lbs

WIRELESS RECEIVER:

Resolution Supported:	640 x 480 @ 12fps or 320 x 240 @ 25fps
Receiving Sensitivity:	-81dBm
Consumption Current (Max.):	200mA
Power Supply:	12V DC
Dimensions (W x D x H):	18mm x 93mm x 170mm / 0.7" x 3.7" x 6.7" (with antenna attached)
Weight:	0.1kg / 0.2lbs

VANTAGE

LH110CW SERIES

PRODUCT INFORMATION

Back Panel:

Product Information:

MODEL	CONFIGURATION	PACKAGE	W x D x H in & mm	WEIGHT	CUBE	UPC Code
LH1425WL13B	4 ch DVR with 500GB HDD x 1 - pack L13LE10B x 1 - pack LW2110PK2B	Brown	426mm x 335mm x 320mm/ 16.8.″ x 13.2″ x 12.6	5.8 kg/13 lbs	0.04599m / 1.64ft	7-78597-11407-2
LH114501C2WL13B	4 ch DVR with 500GB HDD x 1 - pack L13LE10B x 1 - pack LW2110PK2B	Brown	426mm x 335mm x 320mm/ 16.8.″ x 13.2″ x 12.6	5.8 kg/13 lbs	0.04599m / 1.64ft	7-78597-11408-9
LH114501C2WL13	4 ch DVR with 500GB HDD x 1 - pack L13LE10B x 1 - pack LW2110PK2B	Retail	333mm x 268mm x 443mm/ 13.2″ x 10.5″ x 17.5	5.8 kg/13 lbs	0.04599m / 1.64ft	7-78597-11411-9
DVR Pack Includes:	DVR with pre-installed HDD, Remote Control, Power adapter, Mouse, Ethernet Cable, CD, QSG, Instruction Manual					
LED Monitor Pack Includes:	13.3″ LED Monitor with stand, Remote Control with (2) Batteries, VGA Cable, Power Adapter, Instruction Manual					
1 pack LW2110PK2B Includes:	2 x Wireless Receivers, 2 x Wireless Cameras, 3 x Power Adapters, 1 x Power Adapter Splitter Cable, 2 x BNC Female / RCA Male Adapters, 2 x 3ft BNC Extension Cables					

Dimensions:

DVR:

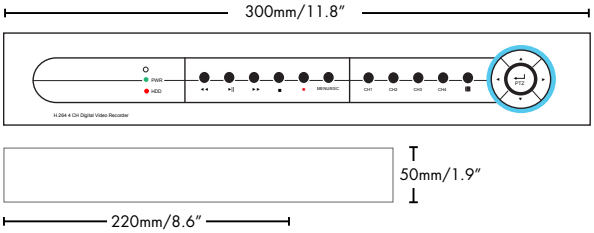

WIRELESS RECEIVER & CAMERA:

LED MONITOR:

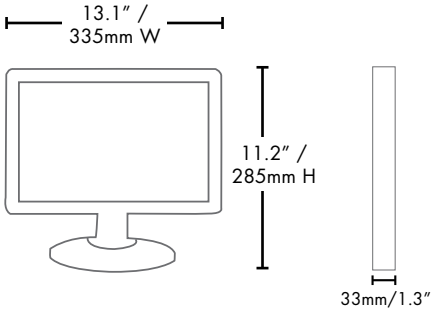

DISCLAIMERS

1. Cameras and receivers require a wired connection to an electrical outlet (power adaptors included).
2. Recording time may vary based on recording resolution & quality, lighting conditions and movement in the scene.
3. Requires a high speed internet connection and a router (not included).
4. PC (Microsoft Windows™ 7/Vista/XP) compatible using Internet Explorer browser. Mac OSX Snow Leopard 10.6 or above using Safari browser.
5. Not recommended for submersion in water. Installation under shelter required.
6. Stated IR illumination range is based on ideal conditions. Actual range and image clarity depends on installation location, viewing area and light reflection/absorption level of object.
7. Maximum transmission range. Actual range dependent upon building materials and other obstructions in path of wireless signal.
8. Using multiple receivers in close proximity to each other may cause a slight slowdown in frame rate performance. It is recommended to use the included 3ft extension cable.

† Instant Smart Phone Compatibility on iPhone™, BlackBerry (supported model numbers: 9800, 9700, 9000), Android (version 1.5 & above), Windows Mobile (6.0, 6.5), Symbian 3rd & 5th generation phones. Selectable one channel live viewing. Mobile phone data plan is required (not included). Router port forwarding required. For the latest smart phone compatibility list check www.lorextechnology.com as new smart phone models become available in the market.

* Number of Channels/ Cameras/ Accessories/ HDD (hard disk drive) capacity may vary by model. Check your package label for specific content information.

All trademarks belong to their respective owners. No claim is made to the exclusive right to use the trademarks listed, other than the trademarks owned by Lorex Technology Inc.
We reserve the right to change models, configurations or specifications without notice or liability. Product may not be exactly as shown. Images are simulated.

Lorex Technology Inc.

250 Royal Crest Court, Markham,
Ontario L3R 3S1
Canada.

901 Elkridge Landing Road, Suite 100
Linthicum, Maryland 21090,
USA.

©2012 Lorex Technology Inc.
As our product is subject to continuous improvement, Lorex Technology & subsidiaries reserve the right to modify product design, specifications & prices without notice and without incurring any obligation. E&OE.

4-05012012