MODEL CVC2274P

1/3” CCD B&W DOME CAMERA

THIS PACKAGE CONTAINS:

B&W Dome Camera with Finished Leads

RCA/BNC Connector

12V DC Power Supply

FEATURES

- Built in 3.6mm Wide Angle Lens.
- Super 0.1 Lux Sensitivity.
- Smoked housing provides unobtrusive appearance.
- Rotate camera 360° and/or tilted ± 90° for optimum angle selection.
- Camera includes Finished Leads, Power Supply and RCA/BNC Connector for Ease of Installation.

INSTALLATION

- Mount the bracket with the supplied mounting screws.
- Screw the camera to the mounting bracket post.
- Supply 12V DC power to marked Power Cable using the supplied 12V DC Adapter (center pole positive +).
- Connect video to the marked Video cable. Connect directly to the RCA Jack or use the supplied RCA/BNC coupler.
- Adjust the camera direction for the desired picture view.

SIDE VIEW

CHROME COATING REFLECTED
ACRYLIC 2.0t

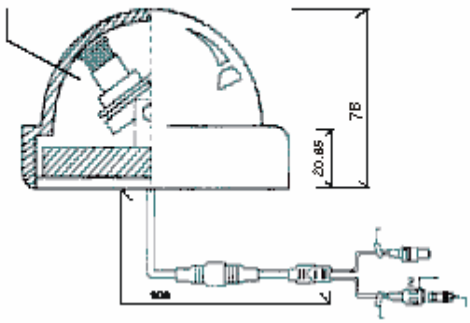

TOP VIEW

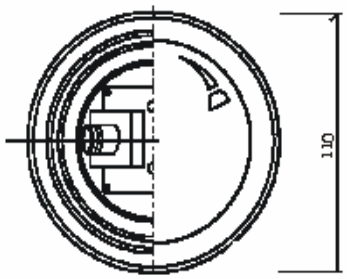

1	DC 12V INPUT JACK (BLACK)
2	VIDEO OUTPUT BNC JACK (LED)

<UNIT /mm>

SPECIFICATIONS

Image Device:	1/3”CCD Image sensor
	510 H x 492 V picture elements
Scanning System:	2:1 Interface
Resolution	380 TV lines
Shutter Control:	Auto 1/60 - 1/100,000
Electronic Shutter	Built- In
Lens:	3.6mm Horizontal 72 °, Vertical 53 °
Minimum Illuminations	0.1 Lux F: 2.0
Outputs/Connections	Video-RCA, Power DC Jack
Power Requirement	12V DC
Operating Temperature	14°F-122°F
Weight:	12 oz
Dimensions:	4.72” (DIA) * 3.07” (H)
Housings:	Black - ABS Plastic

Distributed By:
LOREX PRO
300 Alden Road, Markham, Ontario Canada L3R 4C1

For More Information: www.strategicvista.com

Because our products are subject to continuous improvement, SVC reserves the right to modify product designs and specifications without notice and without incurring any obligation. E. & O.E.