5.6” TFT LCD
Color Rearview System
Installation & Operation

Model No. MO 56 (Monitor only)

SENTINEL
SECURITY SYSTEMS

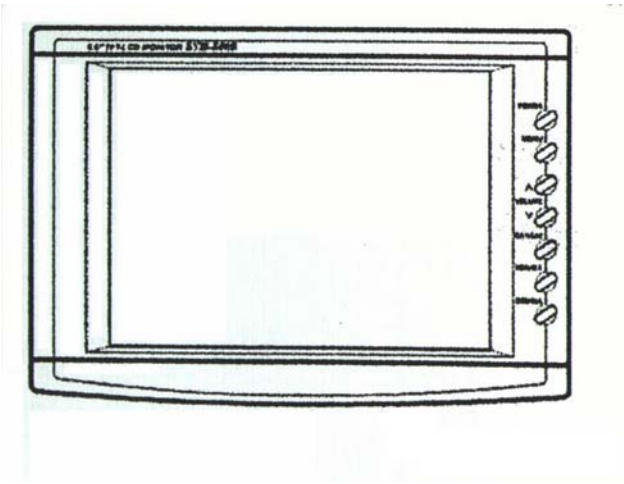

TABLE OF CONTENTS

Safety Precautions……..……3

Features……4

Controls & Installation…….……5 - 10

Connection Diagram……..……11

Operating Instructions…….……12

Cleaning & Maintenance……...…..12

FCC Compliance Statement…….……13

Specifications…….……14

Warranty……...….15

SAFETY PRECAUTIONS

- Read this manual carefully before installation
- Connect wires properly according to the connection drawing
- Operate this unit in the proper temperature range -10° C ~ 60° C
- Under low temperature conditions, the picture will be dark initially, but will resume normal brightness after a few minutes
- Do not open or remove the cover since it may expose you to high voltage or other hazards
- When the engine is turned off do not use the system for any extended periods of time since this will drain the battery power
- Do not push any objects or spill any liquids on the product, since this will result in damage

Monitor

The color monitor is designed for automotive rear view use

- The monitor can be used with a 10V ~ 32V battery with the provided power pack
- The monitor is automatically turned on (To Camera 1) when you set the change lever in the R (reverse gear) position
- High resolution, low reflection TFT LCD Panel
- All function electronic control enable (Power, Menu, Volume, CA 1/2/3, Dimmer)
- OSD background for all functions
- One way audio through camera unit
- Optional two cameras are available

Camera (CA 56 optional)

The color camera is designed for automotive rear view use to provide the driver with a view at the rear of the vehicle.

- The camera require 12V DC through power pack
- The camera is automatically turned on when the monitor is turned on
- The camera utilizes a CCD image sensor having a high quality picture
- Sun Shield included
- Wide field of view:
  112° horizontal 84° vertical 140° diagonal
- Waterproof housing

Power Pack (Switching Box)

- Normal / Mirror control for each camera channel
- Camera 1/2/3 input jack

MONITOR CONTROLS

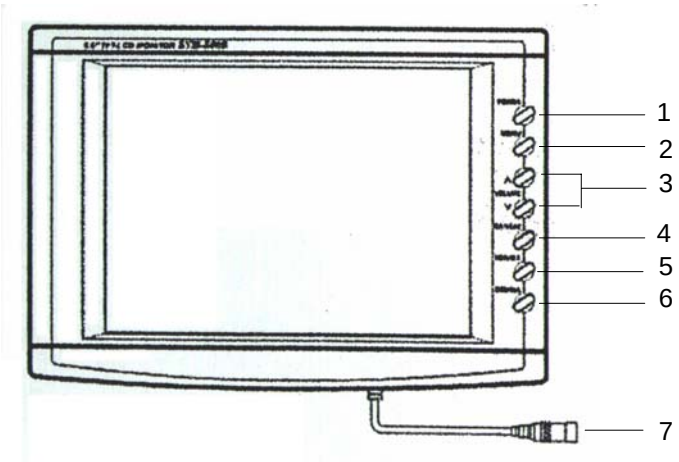

1. **Power :** Power On/Off button
2. **Menu :** Press the MENU button to go into the programming mode for contrast, brightness, color and tint
3. **Volume (- VOL +) :** Control the volume up/down or the picture in the MENU mode
4. **CA 1 / CA 2 :** Press this button to change from one channel to the other
5. **EXT. CAM : (**Extra Camera Selector) : Press this button when using a 3rd camera
6. **Dimmer :** Press to view the picture at night or in a tunnel, etc
7. **Monitor Input :** Plug this input cable into A/V output on the Power Pack

MONITOR INSTALLATION

- Install the monitor on a surface which will support more than 1.8 kg (4 lbs) of weight
- Do not install the unit in an extremely hot or humid place (radiator, air duct, etc) or in a place subject to direct sunlight, excessive dust, mechanical vibration or shock
- The monitor is not designed for outdoor installation

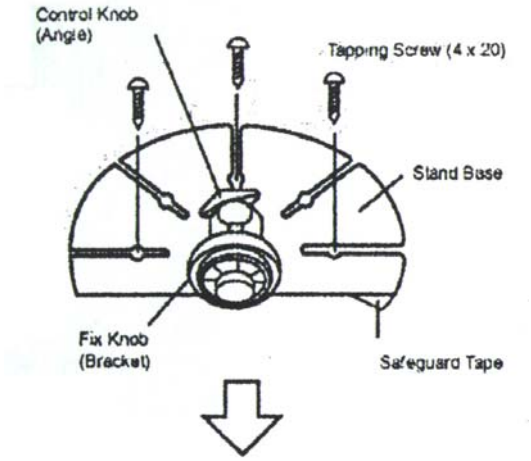

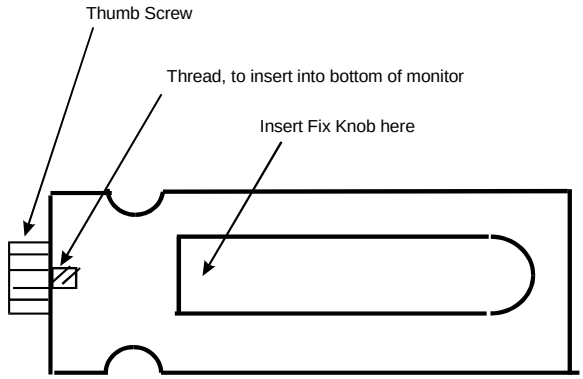

Top View

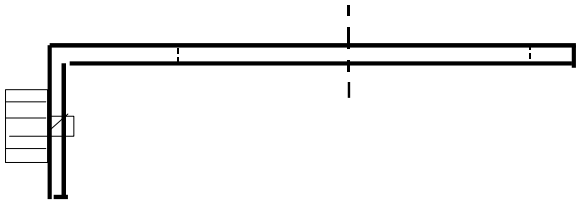

Side View

MONITOR INSTALLATION

1. Before installing this monitor clean it with alcohol
2. Slide the Fix knob (located on the fan shaped bracket) onto the L-shaped bracket
3. Screw the combined bracket onto the monitor. The thread for the monitor is located at the bottom

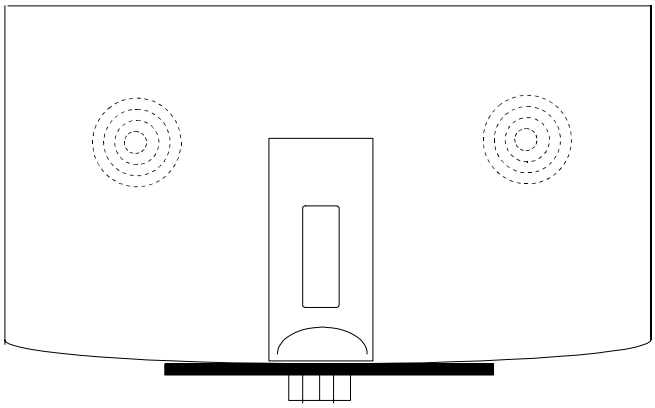

4. Peel off the adhesive tape on the fan shaped base. Using the 4 self tapping screws, screw the fan shaped base onto a flat surface in the vehicle

5. Adjust the angle and direction for proper viewing on the monitor

6. Connect the wires accordingly

CAMERA CONTROLS (OPTIONAL)

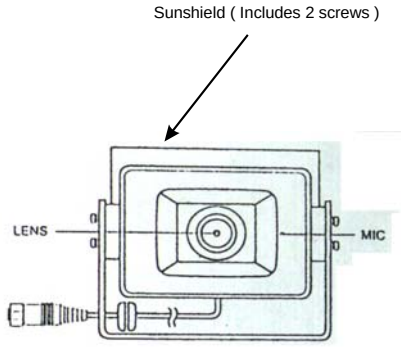

• CAMERA CONNECTOR

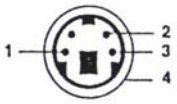

PIN NO.	DESCRIPTION
1	VIDEO OUTPUT
2	AUDIO (Optional)
3	DC 12V POWER
4	GROUND

1. Never loosen the screws on the camera or take the Camera apart. Doing so may reduce water resistance and lead to malfunction
2. Never swing the camera by its cable or pull Strongly on the cable. Doing so can reduce water Resistance, damage the cable, and impair the camera performance
3. Be sure to use sealant, etc., to waterproof the Holes used to install the camera mounting on the car, bolts, and cable holes

4. Always use the included M4 x 10 pan bolts and Steel washers to install the camera. Using longer Bolts will damage the threads

CAMERA INSTALLATION (OPTIONAL)

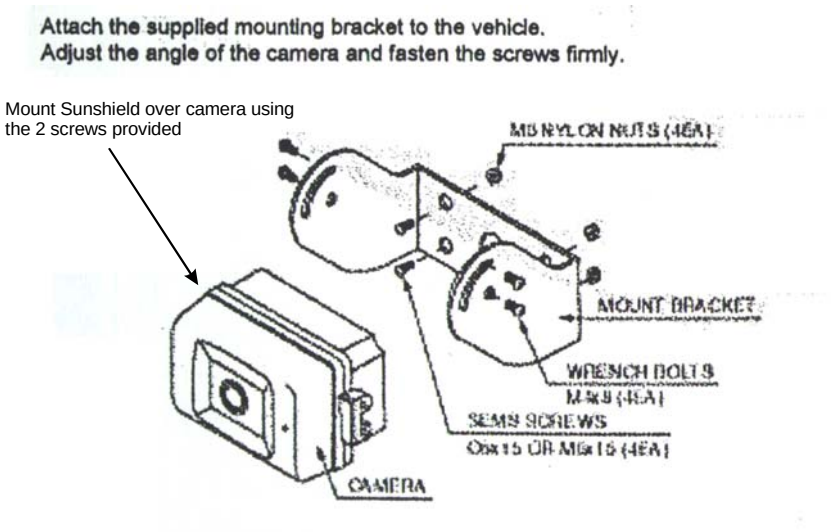

Run the cable from the camera unit to the Power Pack (Switching Box)

Protect the cable by using conduit or running cable inside the vehicle as much as possible

Power Pack (Switching Box)

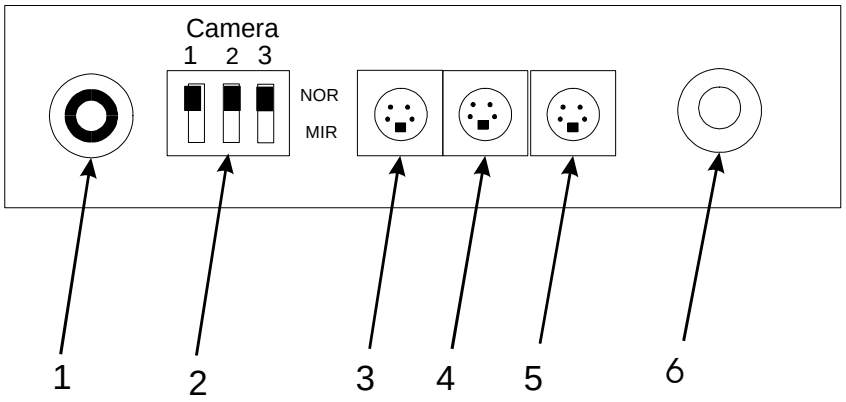

1. **Power Input** : Power input wires (Green, Black, Red)
2. **NOR/MIR Switches**:
   When the switch is in the NOR (Normal) position the picture for that particular camera is normally displayed
   When the switch is in the MIR (Mirror) position the picture will be reversed (Mirror Image) for that particular camera.
3. **CA1** : Camera 1 input (4 pin) - Camera is optional
4. **CA2** : Camera 2 input (4 pin) – Camera is optional
5. **EXT.CA** : To connect to optional camera (4 pin)
6. **AV OUT** : To connect to monitor

CONNECTION DIAGRAM

System uses a maximum of 3 cameras

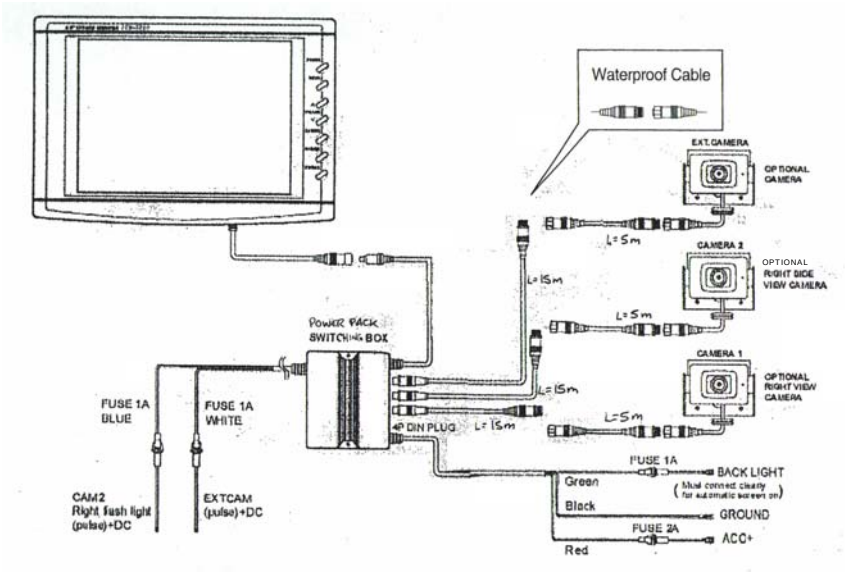

Connect the RED wire to the (10 –32 VDC) positive + power terminal which is energized with the ignition key in the accessory position

Connect the BLACK wire to a metal point on the car or negative battery post

Connect the GREEN wire to the switched positive + power output terminal of the “R” (reverse) gear

OPERATING INSTRUCTIONS

When you turn the ignition key to the Accessory or ON position, power is supplied to the monitor.

To power the monitor push the ON/OFF power button. The monitor is turned off when the ignition key is in the off position

When you set the gear lever in the reverse position, the monitor is turned on and the picture from the Camera 1 appears.

CLEANING AND GENERAL MAINTENANCE

- If your vehicle has been parked in direct sunlight , resulting in a considerable rise in temperature inside the vehicle, allow the unit to cool off before operating.
- Clean the unit with a slightly damp soft cloth, use a mild household detergent. Never use strong solvents such as a thinner or benzine , as they might damage the finish of the unit.

CLEANING
Unplug or turn off the power before cleaning. Do not use any liquid cleaners or aerosol cleaners. Use a damp cloth for cleaning

OBJECT AND LIQUID ENTRY
Never push objects of any kind into the monitor as they may touch dangerous voltage points or short our parts that could result in fire or electric shock. Never spill on the product

SERVICING
Do not attempt to service this system by yourself as opening or removing covers may expose you to dangerous voltage or other hazards. Refer all servicing to qualified service personnel.

FCC COMPLIANCE STATEMENT

This system has been tested and found to comply with the limits for a Class A digital device pursuant to part 15 of the FCC Rules
These limits are designed to provide reasonable protection against harmful interference when the equipment is operated in a commercial environment.
This equipment generates, uses, and can radiate radio frequency energy. If it is not installed and used in accordance with the instruction manual it may cause harmful interference to radio communication
Operation of this equipment in a residential area is likely to cause harmful interference in which case the user will be required to correct the interference at his own expense

CAUTION
Any changes or modification in construction of this device which are not expressly approved by the party responsible for compliance could void the user's authority to operate the equipment

SPECIFICATIONS

Monitor

TV System	EIA
Picture:	5.6" TFT LCD Color monitor with OSD (On-Screen Display) function
Power Source	12V DC ± 10%
Power Requirements	10V ~ 32V
Operating Temp.	-10°C ~ +60°C
Dimensions	174 (W) x 129 (H) x 36 (D) mm
Weight	540 g

Camera (CA 56 Optional)

Image Device	1/4" Interline transfer type Color CCD
Effective pixels	270, 000 (EIA) pixels
Scanning System	Internal SYNC
Horizontal Res.	330 TV lines
Min. Illumination	1.5 Lux, F=2.0
Field of view	140° diagonal
Power Input	12V DC ± 10 %
Power Consumption	120 mA (Max)
Operating Temp.	-30°C ~ +60°C
Weight	330 g

WARRANTY

Home Sentinel warrants this home security product (“The Product”) to be free from defects in material and workmanship for a period of one year from the date of purchase. This warranty does not cover any expenses incurred in the removal and reinstallation of the product. This warranty is offered to the original purchaser of the product only.

If the product should prove defective within the warranty period, return the product postage prepaid to Home Sentinel, along with your dated sales slip or other proof of purchase which will establish your eligibility for the warranty. Home Sentinel will at its option, replace or repair the product free of charge and return the product to you postage prepaid. This warranty does not apply to the product which has been damaged, misused, altered or repaired by anyone other than a Home Sentinel authorized service facility.

Any implied warranties including fitness for use and merchantability are limited in duration to the period of the express warranty set forth above, and no person is authorized to assume for Home Sentinel any other liability in connection with the sale of the product. Home Sentinel expressly disclaims liability for incidental and consequential damages caused by the product. The remedies provided under this warranty are exclusive and in lieu of all others.

This warranty gives you specific legal rights, and you may also have other rights which vary from state to state or province to province. Some states/provinces do not allow limitation to how long warranty lasts, so the above limitation may not apply to you. Additionally, some states/provinces do not allow the exclusion of limitation of consequential or incidental damages, so the above limitation or exclusion may not apply to you.

SENTINEL
SECURITY SYSTEMS

Distributed By:
Strategic Vista Corp.
300 Alden Road, Markham
Ontario, Canada L3R 4C1
Tel: (905) 946-8589 Fax: (905) 947-0138
Toll Free: 1-888-425-6739
www.strategicvista.com