INSTRUCTION MANUAL

2.4 GHZ WIRELESS B&W 4 CHANNEL CAMERA/RECEIVER SYSTEM SG6330

This product broadcasts over public airwaves and its video and audio signals may be intercepted without your consent.

FOR MORE INFORMATION

WWW.LOREXCCTV.COM

Before operating the system, please read this manual thoroughly and retain it for future reference.

CAUTION

RISK OF ELECTRIC SHOCK. DO NOT OPEN.

CAUTION: TO REDUCE THE RISK OF ELECTRIC SHOCK, DO NOT REMOVE COVER (OR BACK). NO USER-SERVICEABLE PARTS INSIDE. REFER SERVICING TO QUALIFIED SERVICE PERSONNEL.

Explanation of two Symbols

The lightning flash with arrowhead symbol, within an equilateral triangle, is intended to alert the user to the presence of uninsulated "dangerous voltage“ within the product's enclosure that may be of sufficient magnitude to constitute a risk of electric shock to persons.

The exclamation point within an equilateral triangle is intended to alert the user to the presence of important operating and maintenance(servicing) instructions in the literature accompanying the appliance.

THE GRAPHIC SYMBOLS WITH SUPPLEMENTAL MARKING ARE ON THE BOTTOM OF THE SYSTEM.

WARNING: To prevent fire or shock hazard, do not expose this unit to rain, water, or wet locations. Do not insert any metallic object through the ventilation grills.

FCC CLASS B NOTICE

Note:
This equipment has been tested and found to comply with the limits For a Class B digital device, pursuant to Part 15 of the FCC Rules. These limits are designed to provide reasonable protection against harmful interference in a residential installation. This equipment generates, uses and can radiate radio frequency energy and, if not installed and used in accordance with the instruction, may cause harmful interference to radio communications. However, there is no guarantee that interference will not occur in a particular installation. If this equipment does cause harmful interference to radio or television reception, (which can be determined by turning the equipment off and on), the user is encouraged to try to correct the interference by one or more of the following measures:

- Reorient or relocate the receiving antenna
- Connect the equipment into an outlet on a circuit different from that to which other devices may be connected.
- Consult the dealer or an experienced radio or television technician for help.

SAFETY INSTRUCTIONS

IMPORTANT SAFEGUARDS
All the safety and operating instructions should be read before the system is operated, and retained for future reference.

1. **HEED WARNINGS** - All warnings on the appliance and in the operating instructions should be adhered to.
2. **FOLLOW INSTRUCTIONS** - All operating instructions should be followed.
3. **WATER AND MOISTURE** - Do not use this video product near water – for example, a bath tub, wash bowl, kitchen sink, laundry tub or swimming pool, or in a wet basement.
4. **POWER SOURCES** - This product should be operated only from the type of power source indicated on the marking label.
5. **OVERLOADING** - Do not overload outlets and extension cords, which can result in a risk of fire or electric shock.
6. **SERVICING** - Do not attempt to service this product yourself. Opening or removing covers may expose you to dangerous voltage or other hazards. Refer all servicing or repairs to qualified service personnel.
7. **DAMAGE REQUIRING SERVICE** - Unplug this product from the wall outlet and refer servicing or repairs to qualified service personnel under the following conditions:
   a. When the power supply cord or plug is damaged.
   b. If liquid has been spilled or objects have fallen into the product.
   c. If the product has been exposed to rain or water.
   d. If the product does not operate normally by following the operating instructions. Adjust only those controls that are covered by the operating instructions.
   e. If the product has been dropped or the cabinet has been damaged.
   f. When the product exhibits a distinct change in performance.
8. **REPLACEMENT PARTS** - When replacement parts are required, be sure the service technician has used replacement parts that are specified by the manufacturer or have the same characteristics as the original part. Unauthorized substitutions may result in fire, electric shock, or other hazards.
9. **SAFETY CHECK** - Upon completion of any service or repairs to this video product, ask the service technician to perform safety checks to determine if the video product is in proper operating condition.
10. **An appliance and cart combination should be moved with care.** Do not place this equipment on an unstable cart, stand, or table.The equipment may fall, causing serious injury to a child or adult, and serious damage to the equipment. Wall or shelf mounting should follow the manufacturer's instructions and should be done with a mounting kit approved by the manufacturer.

TABLE OF CONTENTS

PAGE

INTRODUCTION & FEATURES…… 1

SYSTEM INCLUDES…… 2

CONTROLS AND FUNCTIONS
- Wireless Camera…….....…….. 3
- Wireless Receiver..…….....…….…… 4

INSTALLATION OF WIRELESS CAMERA…… 5

INSTALLATION OF WIRELESS RECEIVER
- Operation with TV (Using RCA Cables).....…….. 6
- Operation with TV (Using Coaxial Cable) .....……..... 7

SYSTEM OPERATION
- Multiple Cameras / Auto Scanning…… 8
- Auto/Manual Options / Selectable Settings…… 9

TROUBLE SHOOTING .....……... 10

TECHNICAL SPECIFICATIONS 11

CARE & MAINTENANCE……..……. 12

INTRODUCTION:

Thank you for purchasing the 2.4 GHz Wireless B&W 4 Channel Camera & Receiver System. This system turns your TV into a Video Security System, providing instant protection of your home or office. Avoiding the hassle of running wires, this system is easy to install and operate for immediate applications.

The system is capable of connecting up to 4 cameras (additional cameras sold separately) with the option to automatically scan between locations.

To learn more about this 2.4GHz Wireless Camera & Receiver System and our complete range of CCTV products, please visit our website at:

www.lorexcctv.com

FEATURES:

- Turns your TV into a Video Security System
- Flexible – move camera from room to room
- Listen-in audio
- Camera has AC or battery option
- 300 ft Wireless Transmission (open space)
- 2.4 GHz Wireless Transmission
- Crystal clear Video and Stereo audio
- 4 Channel Wireless System
- Record picture to any standard VCR

SYSTEM INCLUDES:

1 - 2.4 GHz B&W Wireless Camera

1 - 2.4 GHz Wireless Receiver

Owner's Manual

Also includes:
2 – 9V DC 500mA Adapters
2 – RCA Audio/Video Cables
1 – Coaxial Cable

CONTROLS & FUNCTIONS

WIRELESS CAMERA

FRONT/ SIDE VIEW

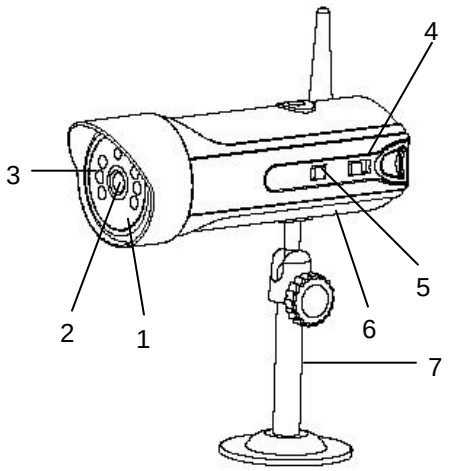

REAR VIEW

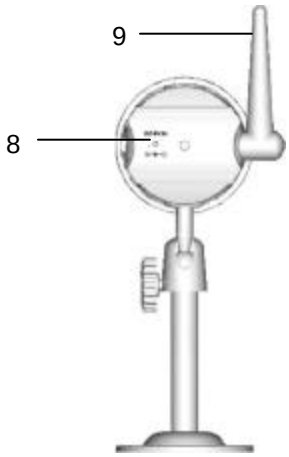

1. **Microphone** – Built-in condenser microphone provides listen-in audio capability from camera to TV
2. **Lens** – B&W CMOS Image Sensor
3. **6 Infrared LED's** – Enhances the picture quality in low light conditions
4. **Channel Selector Switch** – Slide switch for channels 1-4
5. **ON/OFF Power Switch** – Controls power to the camera. Note: Please ensure that you set the switch to the OFF position before plugging the AC adapter into the unit
6. **Battery Compartment** – Optional 4 "AA" batteries (not included) can be used to power the camera
7. **Bracket** – Metal bracket connects to camera for mounting to walls, ceilings or table
8. **DC IN Jack** – Connects to the 9V DC (500mA) adapter.
9. **2.4GHz Antenna** – High gain dipole antenna sends audio and video signals to the receiver

CONTROLS & FUNCTIONS

WIRELESS RECEIVER

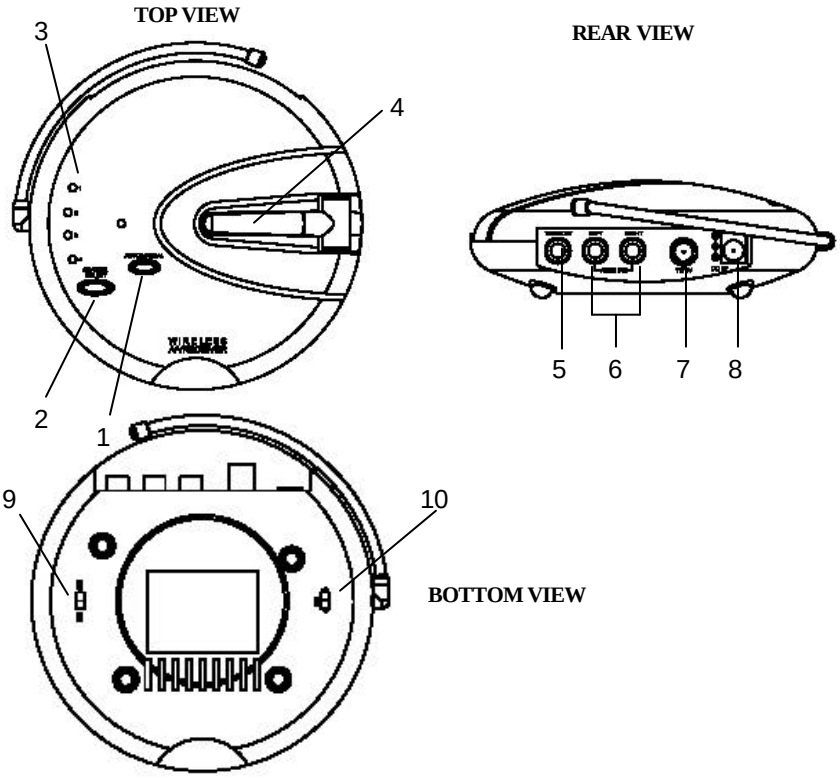

1. **Auto/Manual Button –** Used to activate/deactivate auto sequencing
2. **Channel Selector Button –** Used to manually switch channels from 1-4
3. **LED Channel Indicators –** Indicator light shows selected channel
4. **2.4 GHz Antenna –** High gain dipole antenna receives audio and video signal from the wireless camera
5. **Video Output Jack (Yellow) –** RCA jack for video output connector (when using RCA connector)
6. **Audio Output Jacks L (White) & R (Red) –** RCA jacks for audio output connector (when using RCA connector)
7. **RF Out Jack (To TV) –** Connects the receiver to a TV using the supplied coaxial cable**.** (alternative to RCA cable connection)
8. **DC IN Jack –** Connects to the power source of the receiver
9. **ON/OFF Power Switch –** Ensure this switch is set to OFF before plugging the system into an electrical outlet
10. **Channel 3/4 Selector Switch –** Used to view picture on television when using coaxial cable (preset to channel 3)

INSTALLATION OF CAMERA

CONNECTING CAMERA TO AN AC OUTLET/ BATTERY POWER

STEP 1:

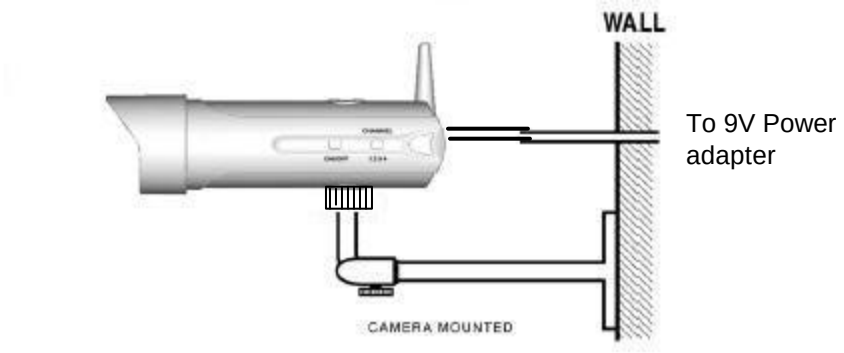

NOTE Ensure the Power Switch on the camera is turned OFF prior to proceeding with the following steps.

1. Attach the stand base to the wall or ceiling where you want to install the camera. Locate a wall stud or ceiling, and secure the bracket using the four supplied screws.

2. Attach the camera to the stand and firmly tighten the swivel.

3. Attach the camera with the stand to the stand base, and firmly tighten the joint knob on the stand base.

4. Connect the supplied 9V 500mA DC adapter to the DC IN jack at the rear of the camera, and plug it into an electrical outlet.

If you are using batteries to power the camera follow these steps:

1. Make sure that the power switch on the camera is turned “OFF”
2. Carefully slide open the battery compartment (bottom of camera)
3. Insert 4 “AA” batteries (not included) into the compartment noting the polarity
   Warning: to prevent damage to the unit, ensure the batteries are aligned properly and battery types are not mixed
4. Close the compartment and turn camera “ON”

INSTALLATION OF RECEIVER

CONNECTING THE RECEIVER TO A TV

STEP 2:

You have two options to connect the Receiver: A) Using RCA Cables (see below), or B) Coaxial Cables, please refer to page 7 of this manual.

A)

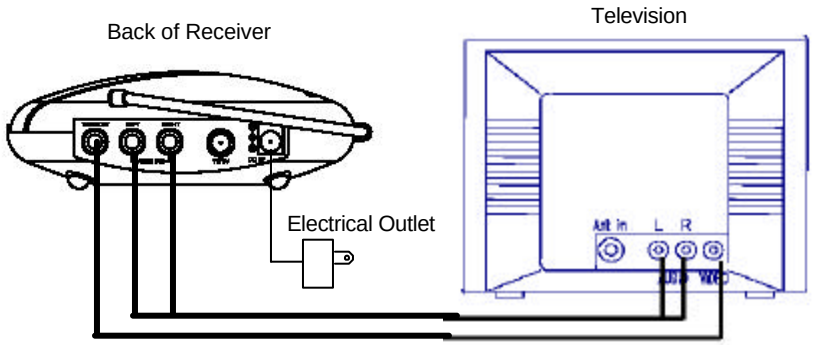

NOTE Ensure the Power Switch on the Receiver is turned OFF before proceeding with the following steps.

1. Place the wireless receiver near your television (or monitor).

2. Connect one end of the RCA cables to the Audio/Video output jacks at the back of the Receiver. Plug the other end of RCA cables into the Audio/Video In jacks on your television. Be sure the yellow, red and white plugs match the yellow, red and white jacks on both the receiver and TV.

3. Connect one end of the supplied 9V 500 mA AC adapter into the DC IN jack at the rear of the receiver; the other end into an electrical outlet. Turn the receiver ON. The system is defaulted to channel 1.

4. Turn your T.V. to AX (Aux. Mode or TV/Video) to view the picture on your second T.V.

5. Adjust the antenna on both the camera and receiver as necessary for optimum viewing.

NOTE For optimum viewing reception you may need to change the channels of both your camera and receiver to the same channels between CH 1 – CH 4

INSTALLATION OF RECEIVER

CONNECTING A RECEIVER TO A TV USING COAXIAL CABLES

B)

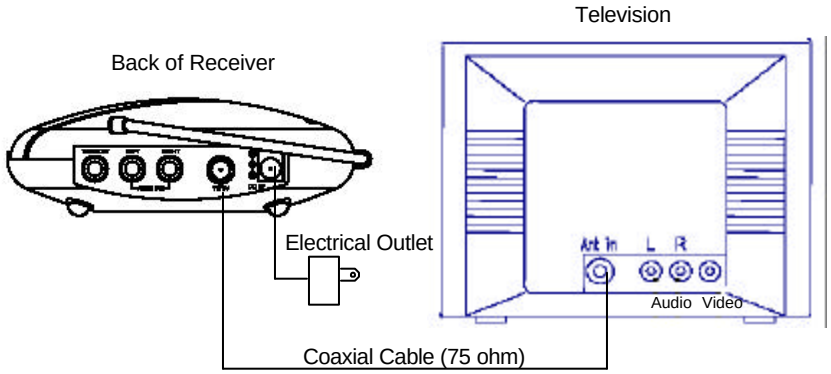

NOTE Ensure the Power Switch on the Receiver is turned OFF prior to proceeding with the following steps.

1. Place the wireless receiver near your television (or monitor).

2. Connect one end of the coaxial cable to the back of the Receiver. Plug the other end of the coaxial cable to the television.

3. Connect one end of the supplied 9V 500 mA AC adapter into the DC IN jack at the back of the receiver; the other end into an electrical outlet. Turn the receiver ON. The system is defaulted to channel 1.

4. Search channels 1 through 4 by using Channel Selector Switch on the Receiver and Camera.

5. Turn your TV to channel 3 to view the picture.

6. Adjust the antenna on both the camera and receiver as necessary for optimum viewing.

NOTE For optimum viewing reception you may need to change the channels of your camera and receiver to the same channels between CH1 – CH 4

SYSTEM OPERATION

CONNECTING MORE CAMERAS TO YOUR SYSTEM (MAX. OF 4)

The receiver will automatically do a self diagnostic when it is powered up to determine how many cameras are connected. It will detect which channels are receiving a video signal. To purchase additional wireless cameras, please visit www.lorexcctv.com

When connecting additional cameras to this system, ensure the camera is set to a different channel. Use the Auto/Manual button to navigate between channels.

AUTO SCANNING - WHEN UTILIZING MORE THAN 1 CAMERA

The video security system provides you with the option to automatically scan/switch between four camera locations. If you are utilizing less than four cameras, you can also set the system to scan only within two or three locations.

Setting Auto Scan to 2 or 3 camera locations:

1. Press and hold the Auto/Manual button for more than 2 seconds. All four LED lights on the front of the receiver will turn ON. Releasing the Auto/Manual button to remain in the four channel switching option.

2. Continue to press and hold the Auto/Manual button. The Channel 4 LED button will turn off. The system is now set to scan between three camera locations (Channel 1-3).

3. Continue to press and hold the Auto/Manual button. The Channel 3 LED button will now be turned off. The system is now set to scan between two camera locations (Channel 1-2).

4. Continue to press and hold the Auto/Manual button to return to the four camera viewing option (all four LED lights will be illuminated).

SYSTEM OPERATION

AUTO AND MANUAL VIEWING OPTIONS

This system is preset to the Manual mode. In Auto mode, the LED light will turn ON.

To manually view a specific camera location, set the system to Manual and press the Ch. Select key to view the desired camera location. Auto Mode is used when more than 1 camera is connected to the system.

Set the Auto/Manual button to Auto Mode in order to have the system automatically rotate between camera locations.

SELECTABLE DWELL SETTING

Dwell Setting is the time duration between each camera view in the auto sequence mode

This system provides you with three selectable dwell options (2, 5 and 10 seconds) when the system is set to Auto Mode. This system is preset to a 2 second selection.

Changing Dwell Time

1. Press and hold the CH Select button. The LED button will turn on to indicate that it is set to 2 seconds.
2. Continue to press and hold the CH Select button. The LED button will flash at a one second interval to indicate that it is now set to the 5 second setting.
3. Continue to press and hold the CH Select button. The LED button will flash three times to indicate it is set to the 10 second setting.

TROUBLESHOOTING

If the system does not function properly, check the following points before contacting the service center.

Problems	Causes & Remedies	
	Camera	Receiver/Transmitter
No power (no picture/sound)	- AC adapter not plugged in - Power switch not turned ON	-AC adapter not plugged in - Power switch not turned on - TV or Monitor not turned on - Improper A/V or coaxial cable connection
Poor Reception	- AC adapter not plugged in - Power switch not turned ON	- Adjust antenna direction - Improper channel 1-4 selection
Picture flickering **Picture too bright or too dark**	- Strong spot light in the field of view - Lighting source in the field of view	- Adjust brightness control on TV/monitor
Picture rolls and jumps or scrambled picture	- Adjust antenna direction	- Adjust antenna direction

FOR MORE INFORMATION, VISIT OUR WEBSITE AT:
www.lorexcctv.com

TECHNICAL SPECIFICATIONS

WIRELESS CAMERA

Image sensor	CMOS B&W
Lens	3.6mm
Picture Elements	320 X 240 (B&W)
Scanning system	2:1 interlace
Scanning frequency	15.734 KHz(H) 59.94Hz (V)
Sync. system	Internal Negative synchronization
Resolution	240 Lines (B&W)
Min. illuminations	0.Lux @ F2.0 (B&W)
Video Output	1.0Vp-p/75 Ohm
Gamma characteristics	r=0.45
Auto Iris	Electrical Auto Iris Shutter sensitivity :1/60-1/6,000
Microphone	Electrronic Condenser
Transmitting frequency	2.4 GHz-2.4835 GHz (4Ch)
Modulation	FM
RF out level	90dBu/V, 3m
Video Output level	1.0Vp-p/75 Ohm
Antenna	Dipole
Dimensions	6.2”(Length) x 2.2” (Diameter)
Battery Option	4 “AA” batteries, not included
Operating temperature	-14º to + 122º F (-10ºC to + 50 ºC)
Power source	9V DC 500mA Adapter

WIRELESS RECEIVER

Receiving frequency	2.411GHz - 2.473GHz (4CH)
Output level	1.0Vp-p(Video), 3.0Vp-p(Audio)
Sensitivity	> 85 dBm
Antenna	Dipole antenna
Operating temperature	-14º to + 122º F or (-10ºC to + 50 ºC)
Power source	9V 500mA DC Adapter
Dimensions	5.25”(Diameter) x 1.5” (Height)
Weight	181 grams or 6.4 Oz

Because our products are subject to continuous improvement, SVII and its subsidiaries reserve the right to modify product design and specifications without notice and without inc urring any obligation. E&OE

CARE AND MAINTENANCE:

Please follow these instructions to ensure proper care and maintenance of this system

Keep your monitor and camera dry. If it gets wet, wipe it dry immediately.

Use and store your unit in normal temperature environment. Extreme temperatures can shorten the life of the electronic devices.

Handle the monitor carefully. Dropping it can cause serious damage to the unit.

Occasionally clean the unit with a damp cloth to keep it looking new. Do not use harsh chemicals, cleaning solvents or strong detergents to clean the unit.

Keep the unit away from excessive dirt and dust. It can cause premature wear of parts.