2.4 GHz WIRELESS COLOR VIDEO SYSTEM

WITH RECHARGEABLE LITHIUM BATTERY

Turn your TV into a Wireless Security System with the Lorex 2.4 GHz Wireless Color Video System. The SG8840 system has an Integrated Rechargeable battery allowing for increased portability with up to 5 hours of battery life. Instant protection of your home or office with easy installation and operation.

FEATURES

- Turns your TV into a Video Security System
- Install and Operate in less than 1 minute
- Flexible – move camera from room to room
- Integrated rechargeable Lithium battery powers the camera for up to 5 hours
- Audio monitoring
- 4 channels available for selecting optimum clear reception
- 300 ft. wireless transmission (open space)†
- Automatic IR illumination provides B&W video images in low light conditions*
- Record picture to any standard VCR

LOREX®

WIRELESS

2.4 GHZ WIRELESS TECHNOLOGY

SG8840

2.4 GHz WIRELESS COLOR VIDEO SYSTEM
WITH RECHARGEABLE LITHIUM BATTERY

SPECIFICATIONS

Camera

Imaging Sensor:	1/3" CMOS
CMOS Total Pixels:	510 x 492 (NTSC)
View Angle:	62°
Minimum Illumination:	1.5 Lux / F1.5
Transmission Frequency:	ISM 2,4000 MHz - 2,483 MHz (4CH)
Transmission Power:	2 mW (milliwatt)
Modulation Type:	FM
Bandwidth:	18 MHz
Power Supply:	+ 5V (DC) , 700 mA
Battery Type / Capacity:	Lithium Battery / 500 mAh
Charge Time:	2 hr.
Working Time:	Up to 5 hours (less time in IR Mode)
Unobstructed Effective Range:	328 ft. / 100 meters
Night Vision Range:	Up to 12 ft. / 3.7 meters
Weight:	4.3 oz / 120 g (not including stand)
Operating Temperature Range:	14° F ~ 122° F -10° C ~ 50° C

Receiver

Receiving Frequency:	ISM 2,400 MHz - 2,483 MHz - 4CH **
Intermediate Frequency:	480 MHz
Demodulation Type:	FM
Antenna:	50 OHM SMA
Receiving Sensitivity:	-85 dBm
Video Output Level:	1 Vp-p @ 75 OHM, S/N > 38DB
Audio Output Level:	1 Vp-p @ 600 OHM
Power Supply:	8V (DC)
Consumption Current:	180 mA
Unobstructed Effective Range:	Up to 328 ft. / 100 meters †
Weight:	4.3 oz / 120 g
Storage Temperature:	-22 F to 185 F / -30 C - 85 C
Operating Temperature:	14 F to 122 F /- 10 C to 50 C
Operating Humidity:	85% RH

† Maximum open space transmission range. Actual range dependent upon building materials and other obstructions in path of wireless signal.
* IR illumination range of 12 ft. under ideal conditions. Objects at or beyond this range may be partially or completely obscured, depending on the camera application.
** 4 available channels for optimal signal

This product broadcasts over public airways and its video and audio signals may be intercepted without your consent.
Wireless cameras require a wired connection to a power supply.

DIMENSIONS

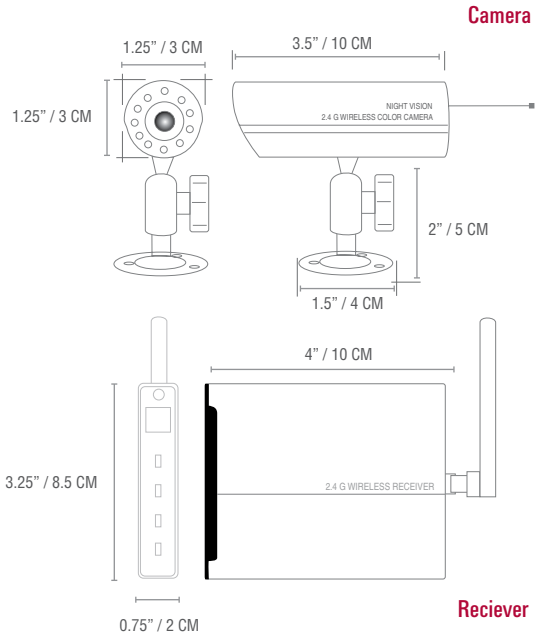

PACKAGE INFORMATION

Model#:	SG8840
UPC:	7-78597-08840-3
Dimensions:	10"(W) X 10.5"(H) X 4.25"(D)
Cube:	0.007 cbm

Model#:	SG8840F
UPC:	7-78597-28840-7
Dimensions:	10"(W) X 12.6"(H) X3.6"(D)
Cube:	0.0075 cbm

Lorex Technology Inc.
300 Alden Road, Markham, Ontario L3R 4C1 Canada.
3700 Koppers Street, Suite 504 Baltimore, Maryland 21227, USA.

©2007 Lorex Technology Inc.
As our product is subject to continuous improvement, Lorex Technology & subsidiaries reserve the right to modify product design, specifications & prices without notice and without incurring any obligation. E&OE

1-27072007