INSTRUCTION MANUAL

14” 4-CHANNEL B&W SWITCHER OBSERVATION SYSTEM
MODEL: SY14S1044C-A

FOR MORE INFORMATION

WWW.SYLVANIACCTV.COM

Before operating this system, please read this Manual thoroughly and retain it for future reference!!!

Thank you for purchasing the Lorex 14" 4-Channel B/W Switcher Observation System. Lorex is committed to providing our customers with a high quality, reliable security product that customers have come to expect from us.

With the new Lorex system, you are capable of viewing up to 4 camera locations in real time. This system allows you to view Sequential cameras.

Connect a time lapse VCR to this system to record key events, or add additional Cameras to view more cameras. To learn more about this 14" B/W Switcher system and to learn about our complete range of accessory products, please visit our website at:

www.sylvaniacctv.com

CAUTION

RISK OF ELECTRIC SHOCK. DO NOT OPEN.

CAUTION! TO REDUCE THE RISK OF ELECTRIC SHOCK, DO NOT REMOVE COVER (OR BACK). NO USER-SERVICEABLE PARTS INSIDE. REFER SERVICING TO QUALIFIED SERVICE PERSONNEL.

Explanation of two Symbols

The lightning flash with arrowhead symbol, within an equilateral triangle, is intended to alert the user to the presence of un-insulated "dangerous voltage" within the product's enclosure that may be of sufficient magnitude to constitute a risk of electric shock to persons.

The exclamation point within an equilateral triangle is intended to alert the user to the presence of important operating and maintenance-(servicing) instructions in the literature accompanying the appliance.

THE GRAPHIC SYMBOLS WITH SUPPLEMENTAL MARKING ARE ON THE BOTTOM OF THE SYSTEM.

"WARNING – TO PREVENT FIRE OR SHOCK HAZARD, DO NOT EXPOSE THE UNIT TO RAIN OR MOISTURE"

NOTE

This equipment has been certified and found to comply with the limits regulated by FCC, EMC and LVD. Therefore, it is designed to provide reasonable protection against interference and will not cause interference with other appliance usage. However, it is imperative that user follows this manual's guidelines to avoid improper usage which may result in damage to the unit, electrical shock and fire hazard or injury.

In order to improve the feature functions and quality of this product, the specifications are subject to change without notice from time to time.

FCC CLASS B NOTICE

Note:
This equipment has been tested and found to comply with the limits For a Class B digital device, pursuant to Part 15 of the FCC Rules. These limits are designed to provide reasonable protection against harmful interference in a residential installation. This equipment generates, Uses and can radiate radio frequency energy and, if not installed and used in accordance with the instruction, may cause harmful interference to radio communications. However, there is no guarantee that interference will not occur in a particular installation. If this equipment does cause harmful interference to radio or television reception, (which can be determined by turning the equipment off and on), the user is encouraged to try to correct the interference by one or more of the following measures:

- Reorient or relocate the receiving antenna.
- Increase the separation between the equipment and receiver.
- Connect the equipment into an outlet on a circuit different from that to which the receiver is connected.
- Consult the dealer or an experienced radio or television technician for help.

FOR MORE INFORMATION:

www.sylvaniacctv.com

GENERAL PRECAUTIONS

1. Read Instructions - All the safety and operating instructions should be read before the product is operated.
2. Retain Instructions - The safety and operating instructions should be retained for future reference.
3. Heed Warnings - All warnings on the product and in the operating instruction should be adhered to.
4. Follow Instructions - All operating and use instructions should be followed.
5. Cleaning - Unplug this product from the wall outlet before cleaning. Do not use liquid cleaners or aerosol cleaners, use a damp cloth for cleaning.
6. Attachments - Do not use attachments not recommended by the product manufacturer as they may cause hazards.
7. Water and Moisture - Do not use this product near water - for example, near a bath tub, wash bowl, kitchen sink, or laundry tub; in a wet basement; or near a swimming pool; and the like.
8. Accessories - Do not place this product on an unstable cart, stand, tripod, bracket, or table. The product may fall, causing serious injury to a child or adult, and serious damage to the product. Use only with a cart, stand, tripod, bracket, or table recommended by the manufacturer, or sold with the product. Any mounting of the product should follow the manufacturer's instructions, and should use a mounting accessory recommended by the manufacturer.
9. A product and cart combination should be moved with care. Quick stops, excessive force and uneven surfaces may cause the product and cart combination to overturn.
10. Ventilation - Slots and openings in the cabinet are provided for ventilation and to ensure reliable operation of the product and to protect it from overheating and these openings must not be blocked or covered. The openings should never be blocked by placing the product on a bed, sofa, rug or other similar surface. This product should not be placed in a built-in installation such as a bookcase or rack unless proper ventilation is provided or the manufacturer's instructions have been adhered to.
11. Power Source - This product should be operated only from the type of power source indicated on the marking label. If you are not sure of the type of power supply to your home, consult your product dealer or local power company. For products intended to operate from battery power or other sources, refer to the operating instructions.
12. Grounding or Polarization - This product is equipped with a three-wire grounding-type plug, a plug having a third (grounding) pin. This plug will only fit into a grounding-type power outlet. This is a safety feature. If you are unable to insert the plug into the outlet, contact your electrician to replace your obsolete outlet. Do not defeat the safety purpose of the grounding-type plug.
13. Power - Cord Protection - Power supply cords should be routed so that they are likely to be walked on or pinched by items placed upon or against them, paying particular attention to cords at plugs, convenience receptacles and the point where they exit from the product.
14. Protective Attachment Plug - The product is equipped with an attachment plug having overload protection. This is a safety feature. See Instruction Manual for replacement or resetting of protective device. If replacement of the plug is required, be sure the service technician has used a replacement plug specified by the manufacturer that has the same overload protection as the original plug.
15. Lightning - For added protection for this product during a lightning storm, or when it is left unattended and unused for long periods of time, unplug it from the wall outlet and disconnect the antenna or cable system. This will prevent damage to the product due to lightning and power-line surges.
16. Power Lines - An outside antenna system should not be located in the vicinity of overhead power lines or other electric light or power circuits, or where it can fall into such power lines or circuits. When installing an outside antenna system, extreme care should be taken to keep from touching such power lines or circuits as contact with them might be fatal.
17. Overloading - Do not overload wall outlets, extension cords or integral convenience receptacles as this can result in a risk of fire or electric shock.

18. Object and Liquid Entry - Never push objects of any kind into this product through openings as they may touch dangerous voltage points or short-out parts that could result in a fire or electric shock. Never spill liquid of any kind on the product.

19. Servicing - Do not attempt to service this product yourself as opening or removing covers may expose you to dangerous voltage or other hazards. Refer all servicing to qualified service personnel.

20. Damage Requiring Service - Unplug this product from the wall outlet and refer servicing to qualified service personnel under the following conditions:
    a. When the power-supply cord or plug is damaged,
    b. If liquid has been spilled, or objects have fallen into the product,
    c. If the product has been exposed to rain or water,
    d. If the product does not operate normally by following the operating instructions. Adjust only those controls that are covered by the operating instructions as an improper adjustment of other controls may result in damage and will often require extensive work by a qualified technician to restore the product to its normal operation,
    e. If the product has been dropped or damaged in any way, and
    f. When the product exhibits a distinct change in performance – this indicates a need for service

21. Replacement Parts - When replacement parts are required, be sure the service technician has used replacement parts specified by the manufacturer or have the same characteristics as the original part. Unauthorized substitutions may result in fire, electric shock or other hazards.

22. Safety Check - Upon completion of any service or repairs to this product, ask the service technician to perform safety checks to determine that the product is in proper operating condition.

23. Wall or Ceiling Mounting - The product should be mounted to a wall or ceiling only as recommended by the manufacturer.

24. Heat - The product should be situated away from heat sources such as radiators, heat registers, stoves or other products (including amplifiers) that produce heat.

Portable cart warning

CONTENTS

1. CAUTIONS & FEATURES ----------4

2. SYSTEM INCLUDES ----------5

3. MONITOR CONTROLS - FRONT PANEL ----------6

4. MONITOR CONTROLS - BACK PANEL ----------9

5. SETTING MENU ----------10

6. STANDARD WIRED CAMERA & CAMERA INSTALLATION----------11

7. MONITOR CONNECTIONS & TROUBLE SHOOTING ----------12

8. TECHNICAL SPECIFICATIONS ----------13

9. OPTIONAL ACCESSORIES ----------14

10. APPENDIX - A CONNECTING MONITOR TO STANDARD VCR ----------15

11. APPENDIX - B CONNECTING TO SLAVE MONITOR ----------16

12. APPENDIX - C CONNECTING TO A LOREX TIME LAPSE VCR
FOR ALARM REC. ----------17

13. APPENDIX - D CONNECTING TO A LOREX TIME LAPSE VCR
FOR NORMAL REC. ----------18

14. APPENDIX - E CONNECTING TO A LOREX DVR
FOR NORMAL RECORDING ----------19

15. APPENDIX - F CONNECTING TO A LOREX DVR
FOR ALARM RECORDING ----------20

16. CARE AND MAINTENANCE ----------21

CAUTIONS

1. All the warnings and instructions of this manual should be followed

2. Remove the plug from the outlet before cleaning. Do not use liquid aerosol detergents. Use water damped cloth for cleaning

3. Do not use this unit in very humid and wet places

4. Keep enough space around the unit for ventilation. Slots and openings of the cabinet should not be blocked.

5. During flashes of lightning or cracks of thunder, or when the system is not used for a long time, unplug the system power supply and disconnect the antenna and cables to protect the unit from lightening or power surges.

FEATURES

Monitor Features:

- Sequentially view up to 4 cameras
- Metal cabinet with 4 camera inputs (4 DIN / 4 BNC and 4 audio RCA)
- 2 way audio
- Video loss detection warning
- On screen viewing: date*time*camera
- Remote control or main panel operation
- Standby switch enables monitor screen to be turned off while recording
- Multi-voltage system 100 – 240Volts

Standard Camera Features:

- 1/4” CMOS B&W Camera with night vision
- Built in speaker and microphone to allow for two way audio communication
- Metal mounting bracket

SYSTEM INCLUDES

14” 4-CHANNEL B&W MONITOR WITH REMOTE CONTROL

4 - 1/4” CMOS B/W CAMERAS WITH NIGHT VISION, METAL STAND AND 57 FT CABLE

IMPORTANT NOTE: To increase the life of the CRT and to help prevent “burn in” on the monitor, it is strongly recommended that the monitor be set to standby mode when not in use for observation. In standby mode, output to a connected time lapse VCR will continue, though no picture will be displayed on the monitor’s screen.

MONITOR CONTROLS - FRONT PANEL

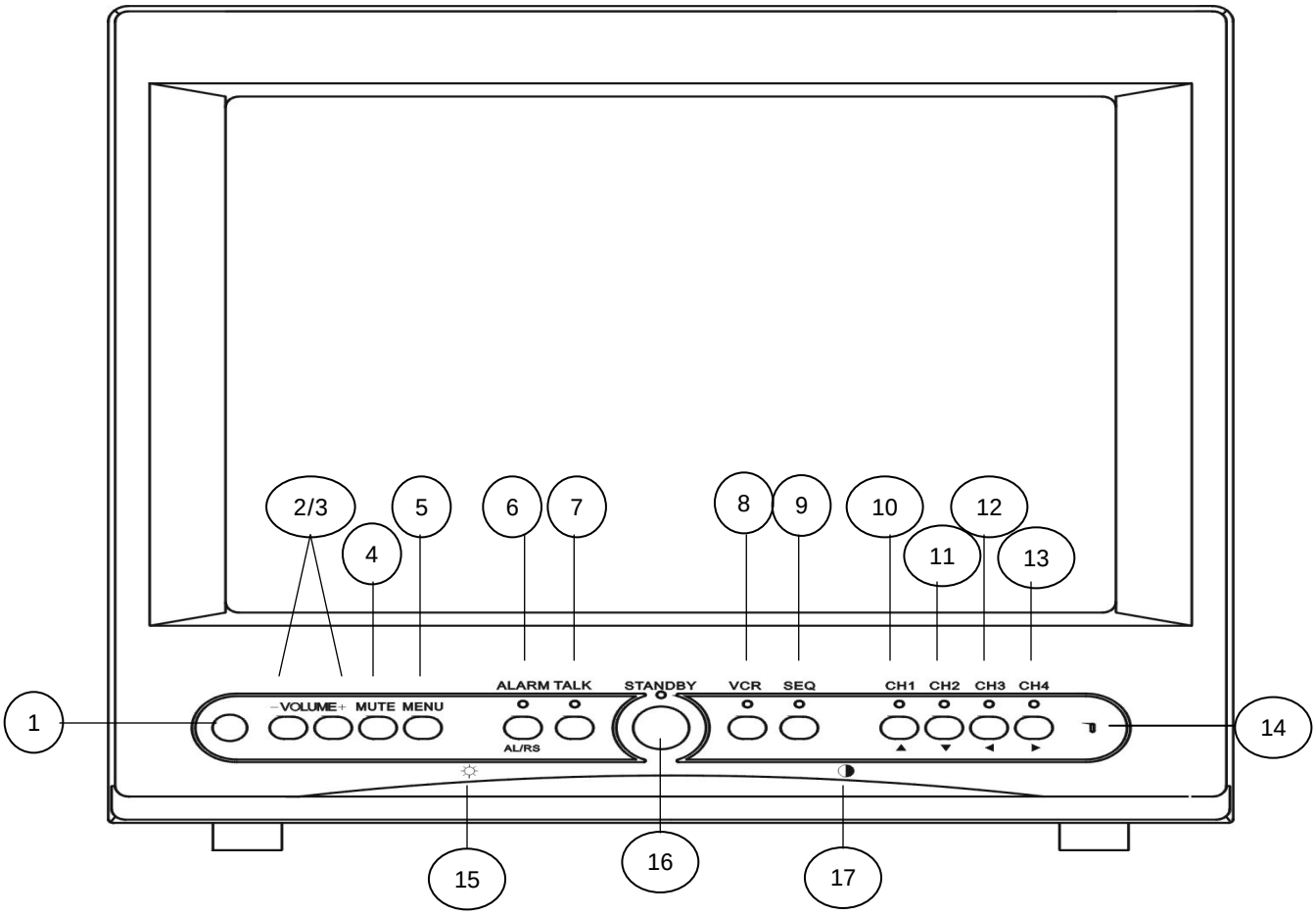

1. **Infra-Red Receiver** – Receives signal from remote control to the monitor.

2/3. Volume – Decreases/Increases volume sound. Press "-" to decrease the sound level. Press "+" to increase the sound level.

4. **Mute** – This button will disable the audio feature from the camera to the monitor. The amber LED light will be on when the Mute button is selected. To restore, press the Mute button again.

5. **Menu** – This button will access the On-Screen display feature. Press the Menu button to access the System Set-up Display. Each new screen is explained in detail in the next few pages. Use UP/DOWN/LEFT/RIGHT arrow keys (channel 1 – 4) to move around and change settings.

6. **Alarm/AL/RS** – This button activates the Motion Alarm detection. To deactivate, press this button again. Also, resets the Alarm settings to the previous mode.

NOTE: If the alarm feature has been used by connecting external alarm devices (refer to Appendix C) to the monitor, the buttons will be disabled until the Alarm button has been pressed. In the event of more than one alarm occurs, the monitor will automatically sequence between the camera locations to display the multiple alarm locations.

7. **Talk Button** – By pressing and holding this button the user has the ability to talk to a specific camera location. This button must be pressed the entire time, while talking. To listen to the camera location release the talk button. Note: This feature is only available with the wired cameras, which have two-way audio feature.

8. **VCR Button** – This button will change the display from the camera inputs to the VCR Audio/Video playback and recording signal. The amber LED light located over this button will be ON when the VCR mode selection has been chosen. To return to the previous screen, press VCR again.

9. **Sequence Button** – This button will place the unit into Sequential display mode. The amber LED light located over this button will be ON. In sequential display mode, the monitor will automatically rotate between the different cameras. Note, To automatically scan between the number of cameras connected, press the Menu button and set the channel without a camera to zero (00SEC). Also, a channel with a Video Loss will be skipped in sequencing.

10. **Channel 1** – Displays Full screen of Camera 1.

11. **Channel 2** – Displays Full screen of Camera 2.

12. **Channel 3** – Displays Full screen of Camera 3.

13. **Channel 4** – Displays Full screen of Camera 4.

14. **Microphone** – Picks up sound around the camera.

15. **Brightness Control** – Changes brightness of picture, turn left/right to adjust control.

16. **Standby Switch** – This button will turn the unit into Standby Mode (the amber LED light will be ON). In Standby mode, the VCR Out terminal will still output signal. Pressing it again will turn the power ON (the amber LED light will be OFF). The master power switch, which controls the monitor is located at the back of the unit.

17. **Contrast Control** – Changes contrast of picture, turn left/right to adjust control.

MENU OSD / SCREEN SHOTS

☞ 1. TITLE SET
2. TIME / DATE
3. DISPLAY MODE
4. ALARM MODE
5. SEQUENCE
6. ALARM HISTORY
7. EXIT

Title Set - Changes titles of each camera location (up to 8 characters).

Time / Date - Changes the time and date.

Display Mode - Changes location of screen display (Left/Right and On/Off options). Allows you to remove or activate the camera titles

```
DISPLAY MODE

TIME / DATE    : DATE TIME
 TYPE          : MM/DD/YY
LOSS POSITION: LEFT
DISPLAY        : ON

PUSH ↑ ↓ ←→, MENU KEY
```

Alarm Mode - This screen allows you to change Alarm functions (Alarm ON/OFF) individually. Adjust the duration to which the alarm will occur. Activates/Deactivates the PIR Motion Sensor of the camera. The Alarm Reset and Beep Time can be adjusted from 0 to 60 seconds.

```
ALARM MODE

ALARM RESET TIME : 10SEC
BEEP TIME        : 05SEC
ALARM            : BUZZER+OSD
V-LOSS           : BUZZER+OSD
CAMREA1          : ON
CAMERA2          : ON
CAMERA3          : ON
CAMERA4          : ON

PUSH ↑ ↓ ←→, MENU KEY
```

Sequence - The duration to which the monitor moves from one camera to another (adjustable). The Sequence time can be adjusted from 0 to 60 seconds.

```
SEQUENCE

CH1   : 02SEC
CH2   : 02SEC
CH3   : 02SEC
CH4   : 02SEC

PUSH ↑ ↓ ←→, MENU KEY
```

Alarm History - This button allows the user to view past alarm activity.

MONITOR CONTROLS - BACK PANEL

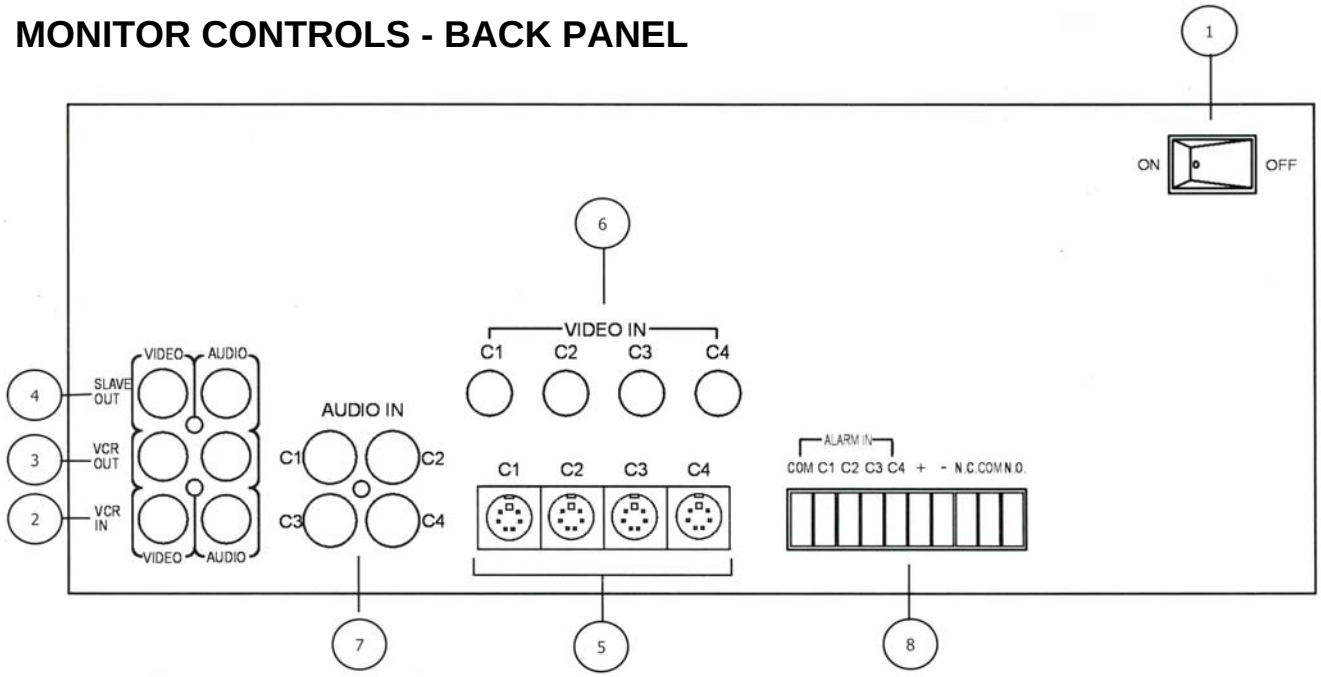

1. **Power -** This button controls power to the entire unit . Depress the side with the '•', to turn power ON. Depress the other side to turn the unit OFF. When the monitor is On, it is defaulted to Channel 1.

2. **VCR Audio /Video In -** Use with A/V cables (not supplied) to receive audio and video from an external source (VCR).

3. **VCR Audio/Video Out -** Use with A/V cables (not supplied) to transmit audio and video monitor to VCR.

4. **Slave Audio/Video Out -** Use with A/V cables (not supplied) for use with a slave monitor.

5. **6 Pin Din Camera Inputs -** Channel 1-4 Camera inputs (for cameras with 6 Pin Din camera inputs).

6. **BNC Camera Inputs -** Channel 1-4 camera inputs (for cameras with BNC Video outputs).

7. **RCA Audio inputs -** Channel 1-4 Audio inputs (for cameras with RCA Audio output).

8. **Alarm Function Terminals -** These terminals are used to connect external alarm devices such as a motion sensor, door/alarm sensor, or time lapse VCR. Refer to Alarm Connection in the appendices for further details.

*****IMPORTANT NOTE: WHEN RECORDING USING A TIME LAPSE VCR*****

<u>Actual recording</u> – Records what appears on the Monitor.

SETTING MENU

Features of the Remote Control. For more details on specific remote control features, refer to the Monitor features

KEY	FUNCTION DESCRIPTION
STANDBY	Turns unit into Standby Mode
MUTE	Disconnect the audio from the Camera
1-4	Allows the user to select individuals cameras
VCR	Sets monitor to VCR Mode
MENU	Calls up the Menu Feature
AL/RS	Press this button to Reset the Alarm
AL ON/OFF	Turns the Alarm ON/OFF
◀ LEFT	Use the left arrow key in Menu.
▶ RIGHT	Use the right arrow key in Menu.
VOL + ▲	Increases the volume sound
VOL - ▼	Decreases the volume sound
CH + ▲	Changes channel Up
CH - ▼	Changes channel Down
SEQ	Automatic channel scanning
DISPLAY	Display ON/OFF on screen from current status (Title, Date, Time)

STANDARD WIRED CAMERA

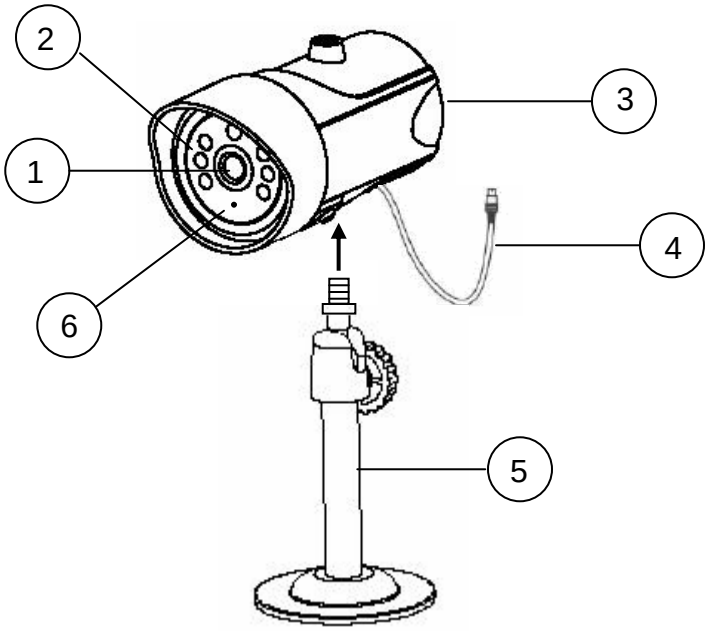

1. Camera Lens – Delivers high quality image by using a 1/4” CMOS Image Sensor
2. LED’s - 6 IR LED’s for night vision
3. Speaker – Delivers sound from the monitor to the camera
4. Camera Input – Connect cable to monitor
5. Bracket – Metal bracket connects to camera for mounting to walls, ceilings or table
6. Microphone – Picks up sound around the camera

INSTALLATION

CAMERA INSTALLATION

A. Camera Unit

Permanent installation using metal camera bracket

1. Attach the Pedestal using 4 screws.	2. Attach the Camera onto the Pedestal and tighten the thumb screw.
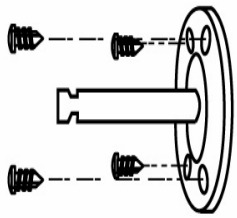	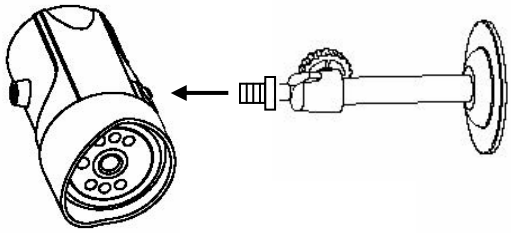

IMPORTANT NOTE:

Keep camera installed away from direct sunlight. Also avoid places where humidity is high or unable to protect rain. The mounting bracket must be attached to a structural device such as wall stud or ceiling after using suitable fastener.

MONITOR CONNECTIONS

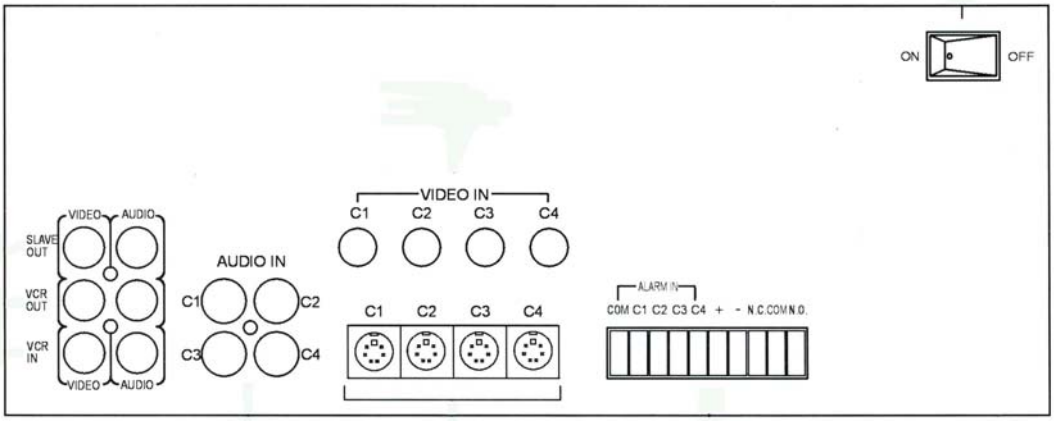

1. **Camera 1 Input**
   Connect one end of the supplied 65ft cable to the first wired camera, the other end to camera Input 1.

2. **Camera 2 – 4 Inputs**
   Connect optional/additional cameras to the camera 2-4 inputs using either the DIN or BNC camera inputs.

TROUBLE SHOOTING

If the system does not function properly, please check the following points.

	PROBLEM	REMEDY
MONITOR	Too dark or bright picture	Readjust the CONTRAST or BRIGHTNESS controls
	NO POWER	Check for AC connection
	Poor picture quality	Clean the camera lens. Readjust the CONTRAST or BRIGHTNESS controls
	Picture but no sound	Adjust the VOLUME
	Shrinking picture	Check the condition of the POWER source
CAMERA	No Picture	Check the cable for any lose connection
	Picture Flickering or Over Exposed	Make sure the camera is not facing any direct light or sunlight

TECHNICAL SPECIFICATIONS

MONITOR

Picture Tube	14” B&W
Horizontal resolution	300 lines at center
Camera Capable	Up to 4
Camera Input	4 DIN / 4 BNC
Alarm Inputs/Outputs	4 / 2
Input signal	1V p-p at 75 ohms terminated
Power Source	Multi-voltage (AC100V – 240 V, 60Hz, 1.0A)
Power Consumption	35 watts
Operating Temperature	32°F ~ 104°F (0°C ~ 40°C)
Color	White Metal cabinet
Weight	25 Lbs.
Dimensions	12.7” (W) x 12.5” (D) x 12.5” (H)

STANDARD CAMERA

Image Device	1/4” CMOS image sensor
Picture Elements	510 H x 492 V
Lens	3.6mm
Illumination	1.0 Lux @ F2.0 without LED 0 lux @ F2.0 with LED
Resolution	240 TV Lines
Shutter control	Auto 1/60 - 1/100,000
Power requirement	Powered from monitor via cable
Operating Temperature	14°F ~ 122°F (-10°C to 50°C)
Weight	13 oz (369 Grams)
Dimensions	2.5” (W) x 4” (D) x 2” (H)
Housings	White

As our products are subject to continuous improvement, SVII and its subsidiaries reserve the right to modify product design, specifications and prices, without notice and without incurring any obligation. E&OE

OPTIONAL ACCESSORIES

The following accessories are available to add to your existing system.

CABLE

Extends viewing length from Camera to monitor. Available In 65, 100 and 250 ft lengths

TIME LAPSE VCR

Used to record key events. Select From a 40 hour real time or 960 Hour time lapse VCR

NIGHTVISION

Weatherproof Night vision accessory. Allows you to see in the dark up to 35-40 distance (for use with Observation system cameras)

OBSERVATION CAMERAS

Accessory PIR motion sensor observation system camera with 2 way audio

SPECIALTY CAMERAS

Select from a wide assortment Of specialty cameras (dome, Weatherproof, bullet, Waterproof, etc., to suit Individual needs

SUNSHADE HOUSING

Protects observation camera From the sun

TO ORDER THESE ACCESSORY ITEMS OR FOR A COMPLETE LINE OF ACCESSORIES
www.sylvaniacctv.com

APPENDIX - A
CONNECTING MONITOR TO A STANDARD VCR

Please see the diagram below for connecting your VCR to the Monitor.

NOTE:
Ensure the Standard VCR's channel is set to A/V Mode in order to ensure reception. Consult your VCR's Owners Manual to set the VCR to this setting.

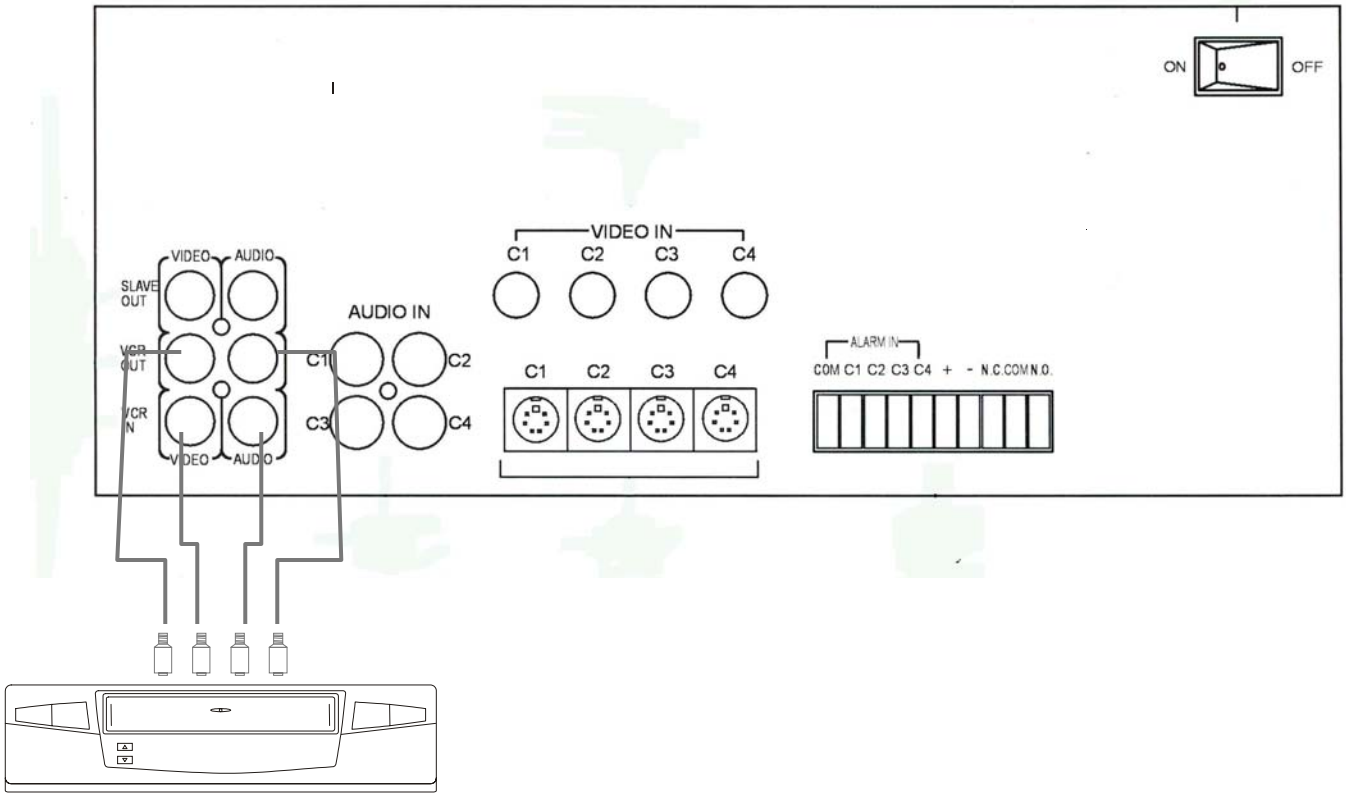

*** Important Note:**	To record the video signal only from the monitor use the VCR Audio/Video out terminals. To record the video out signal including on screen display features (e.g. Date, time, camera identification) use the VCR Audio/Video Slave/Monitor out terminals.

APPENDIX - B
CONNECTING TO SLAVE MONITOR

Connections to another monitor (e.g. Slave Monitor) can be made through “MONITOR OUT” as shown in the diagram below

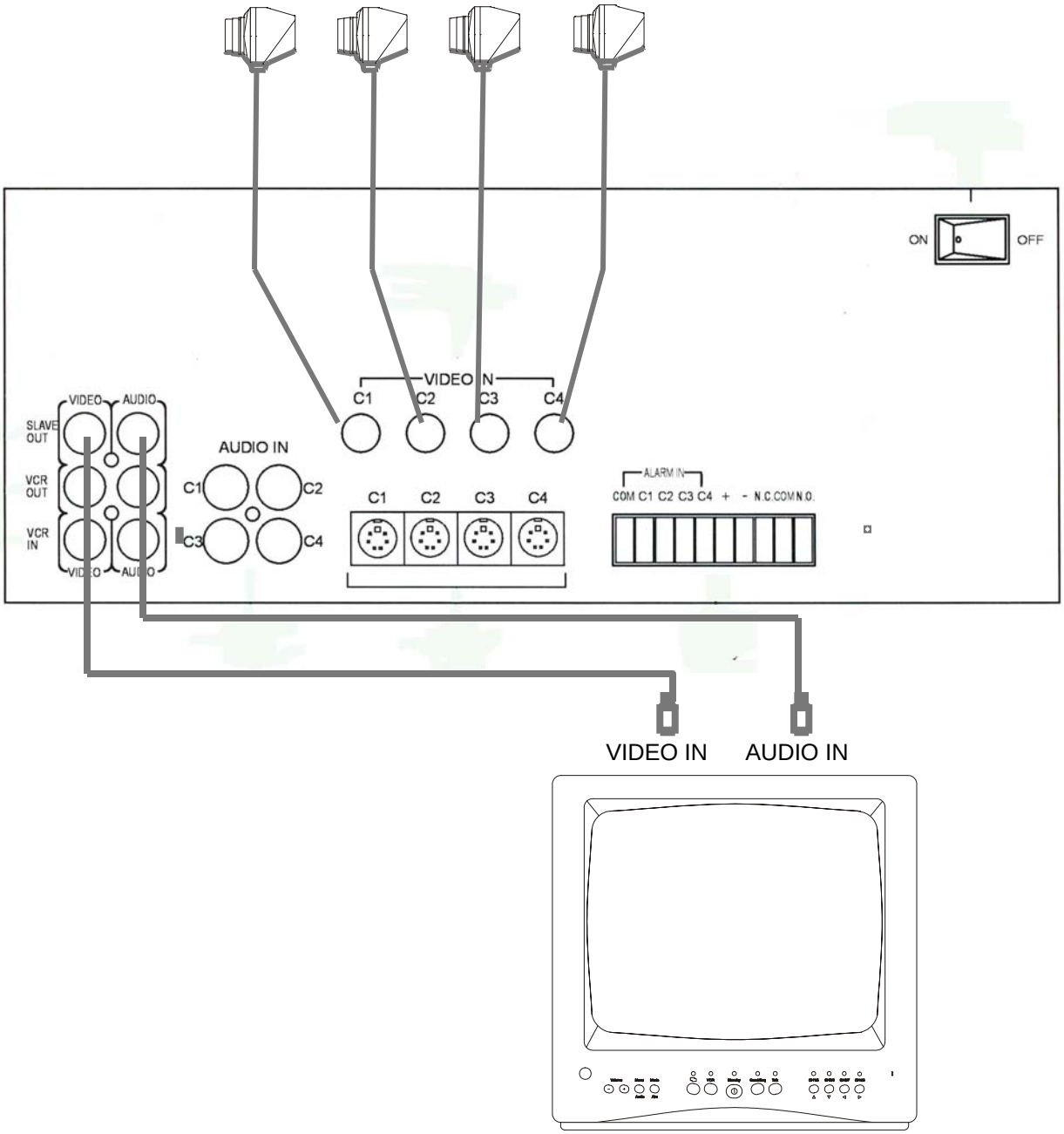

APPENDIX - C
CONNECTING TO A LOREX TIME LAPSE VCR FOR ALARM RECORDING

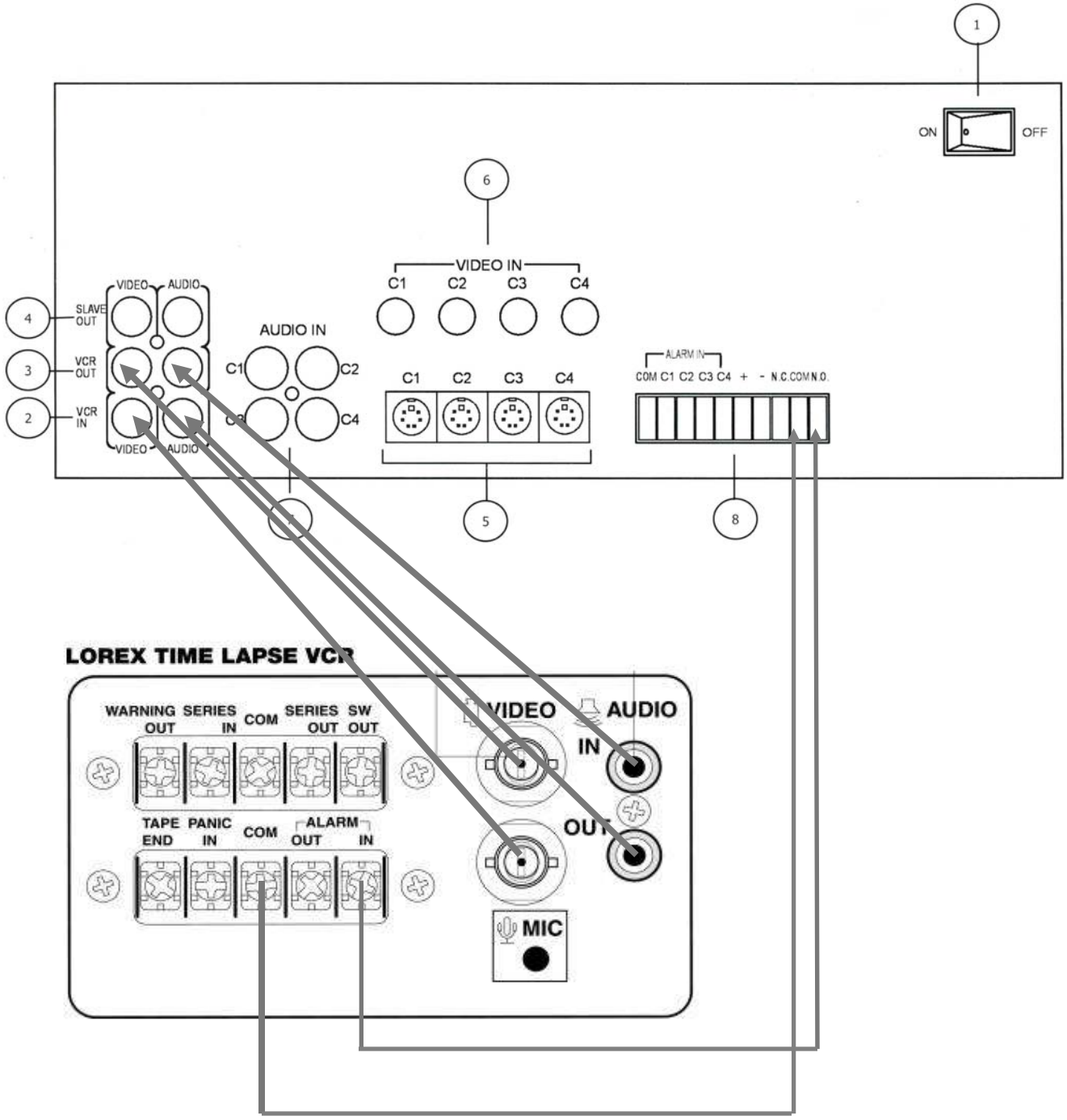

APPENDIX - D
CONNECTING TO A LOREX TIME LAPSE VCR FOR NORMAL RECORDING

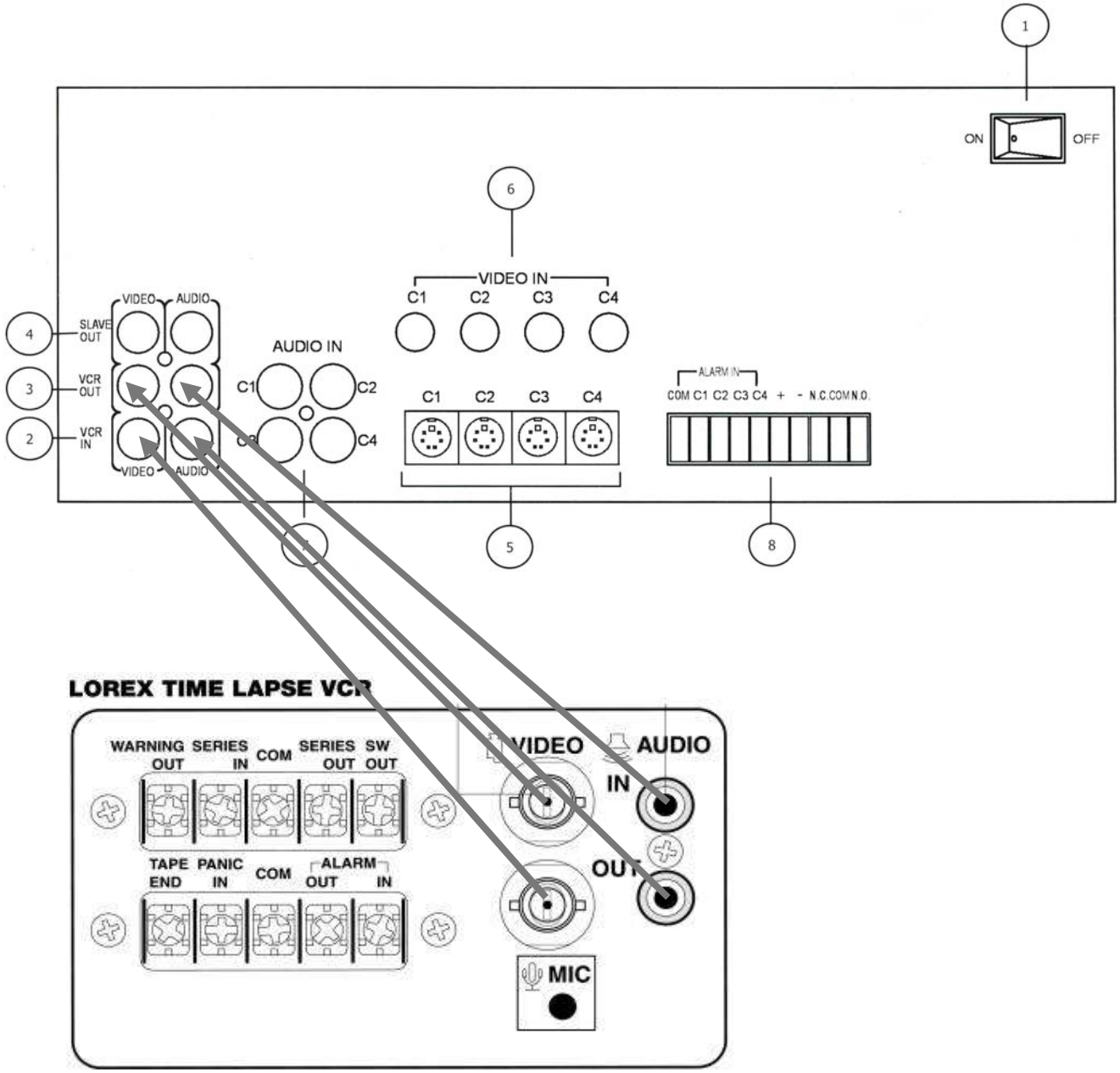

APPENDIX - E
CONNECTING TO A LOREX DVR FOR NORMAL RECORDING

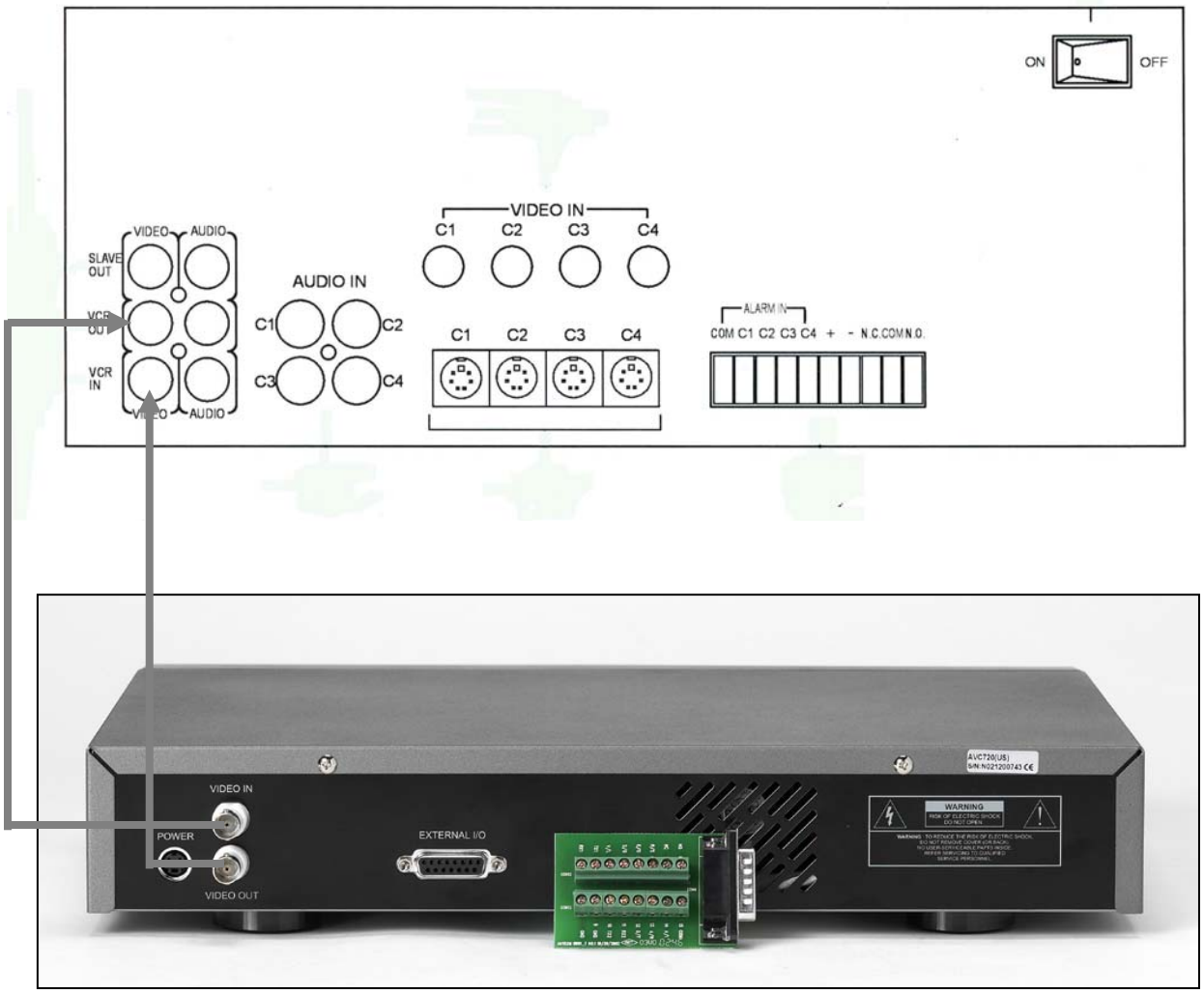

NOTE: When recording to a Digital Video Recorder, the DVR may indicate a Video Loss as the monitor sequences between channels. This Video Loss occurs because the monitor's switching function is analogue, whereas the DVR is a digital product. Therefore a synchronization problem will result.

The Solution to this problem is to adjust the Video Loss alarm sensitivity setting to 3 frames on your DVR unit, or simply disable the video loss function on your DVR. Please contact the manufacturer of your DVR if you require further assistance.

APPENDIX - F
CONNECTING TO A LOREX DVR FOR ALARM RECORDING

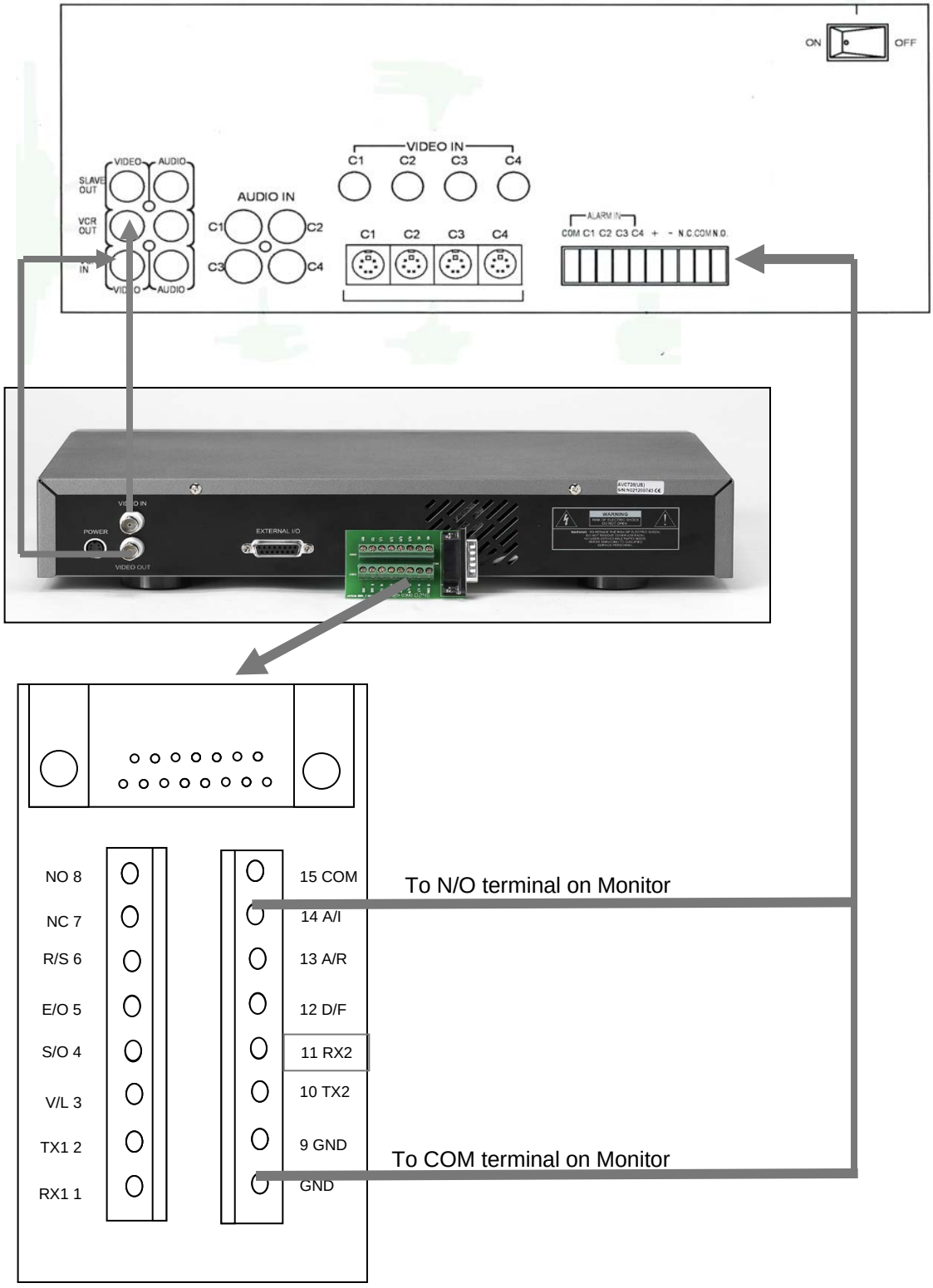

CARE AND MAINTENANCE

Please follow the following instructions to ensure proper care and maintenance of this system

Keep your monitor and camera dry. If it gets wet, wipe it dry immediately.

Use and store your unit in normal temperature environment. Extreme temperatures can shorten the life of the electronic devices.

Handle the monitor carefully. Dropping it can cause serious damage to the unit.

Occasionally clean the unit with a damp cloth to keep it looking new. Do not use harsh chemicals, cleaning solvents, or strong detergents to clean the unit.

Keep the unit away from excessive dirt and dust. It can cause premature wear of parts.