INSTRUCTION MANUAL

21” COLOR QUAD OBSERVATION SYSTEM

FOR MORE INFORMATION

WWW.SYLVANIACCTV.COM

BEFORE OPERATING THIS SYSTEM, PLEASE READ THIS MANUAL THROUGHLY AND RETAIN IT FOR FUTURE REFERENCE

BEFORE OPERATING THIS SYSTEM, PLEASE READ THIS MANUAL THROUGHLY AND RETAIN IT FOR FUTURE REFERENCE

Thank you for purchasing the 21" Color Quad Observation System with 4 Cameras. Lorex Technology is committed to providing our customers with a high quality, reliable security product that customers have come to expect from us.

With this 21" Quad System, you are capable of viewing 4 camera locations in real time. This system provides multiple viewing options including: Quad, Sequential, Selectable or Sequential Picture in Picture, Zoom, Freeze and full screen viewing options.

Connect a time lapse VCR to this system to record key events.

To learn more about this 21" Color Quad Observation system with 4 cameras and to learn about our complete range of accessory products, please visit our website at:

www.sylvaniacctv.com

CAUTION

RISK OF ELECTRIC SHOCK. DO NOT OPEN.

CAUTION! TO REDUCE THE RISK OF ELECTRIC SHOCK, DO NOT REMOVE COVER (OR BACK). NO USER-SERVICEABLE PARTS INSIDE. REFER SERVICING TO QUALIFIED SERVICE PERSONNEL.

Explanation of two Symbols

The lightning flash with arrowhead symbol, within an equilateral triangle, is intended to alert the user to the presence of un-insulated "dangerous voltage" within the product's enclosure that may be of sufficient magnitude to constitute a risk of electric shock to persons.

The exclamation point within an equilateral triangle is intended to alert the user to the presence of important operating and maintenance-(servicing) instructions in the literature accompanying the appliance.

THE GRAPHIC SYMBOLS WITH SUPPLEMENTAL MARKING ARE ON THE BOTTOM OF THE SYSTEM.

"WARNING – TO PREVENT FIRE OR SHOCK HAZARD, DO NOT EXPOSE THE UNIT TO RAIN OR MOISTURE"

NOTE

This equipment has been certified and found to comply with the limits regulated by FCC, EMC and LVD. Therefore, it is designed to provide reasonable protection against interference and will not cause interference with other appliance usage. However, it is imperative that user follows this manual's guidelines to avoid improper usage which may result in damage to the unit, electrical shock and fire hazard or injury.

In order to improve the feature functions and quality of this product, the specifications are subject to change without notice from time to time.

FCC CLASS B NOTICE

Note:
This equipment has been tested and found to comply with the limits For a Class B digital device, pursuant to Part 15 of the FCC Rules. These limits are designed to provide reasonable protection against harmful interference in a residential installation. This equipment generates, Uses and can radiate radio frequency energy and, if not installed and used in accordance with the instruction, may cause harmful interference to radio communications. However, there is no guarantee that interference will not occur in a particular installation. If this equipment does cause harmful interference to radio or television reception, (which can be determined by turning the equipment off and on), the user is encouraged to try to correct the interference by one or more of the following measures:

- Reorient or relocate the receiving antenna.
- Increase the separation between the equipment and receiver.
- Connect the equipment into an outlet on a circuit different from that to which the receiver is connected.
- Consult the dealer or an experienced radio or television technician for help.

Lorex Technology Inc

CONTENTS:

1. GENERAL PRECAUTIONS ---------- 2

2. CAUTIONS AND FEATURES ---------- 3

3. SYSTEM ---------- 4

4. MONITOR CONTROLS - FRONT PANEL ---------- 5

5. MAIN MENU CONTROL ---------- 9

6. MONITOR CONTROLS - BACK PANEL ---------- 12

7. REMOTE CONTROL---------- 13

8. STANDARD WIRED CAMERA ---------- 14

9. MONITOR CONNECTIONS ---------- 15

10. TROUBLE SHOOTING ---------- 15

11. TECHNICAL SPECIFICATIONS ---------- 16

12. OPTIONAL ACCESSORIES ---------- 17

13. APPENDIX A – CONNECTING MONITOR TO A STANDARD VCR ---------- 18

14. APPENDIX B - CONNECTING TO A SLAVE MONITOR ---------- 19

15. APPENDIX C - CONNECTING TO A LOREX TIME LAPSE VCR FOR ALARM RECORDING ---------- 20

16. CARE AND MAINTENANCE ---------- 21

GENERAL PRECAUTIONS:

1. Read Instructions
All of the safety and operating instructions should be read and understood before the product is used.
2. Retain Instructions
The safety and operating instructions should be retained for future reference.
3. Heed Warnings
All warnings on the product and the instruction manual should be followed.
4. Follow Instructions
All operating and use instructions should be followed for optimal performance
5. Cleaning
Disconnect this video product from the power supply before cleaning. Do not use liquid cleaners or aerosol cleaners. Use a damp cloth for cleaning.
6. Attachments
Do not use attachments not recommended by the video product manufacturer as they may cause hazards.
7. Water and Moisture
Do not use this product near water - for example, near a bathtub, wash bowl, kitchen sink, wet basement, or near a swimming pool.
8. Accessories
Use this product only with a stand, tripod, bracket or table recommended by the manufacturer or sold with the product. Any mounting of the product should follow the manufacturer's instructions.
9. Ventilation
This product should never be placed near or over a Radiator or heat register. This product should not be placed in a built-in installation, such as a book case or rack, unless proper ventilation is provided or the Manufacturer's instructions have been adhered to.
10. Power Source
This product should be operated from the type of Power source indicated by the marking label. If you are not sure of the type of power supply to your location, consult your product dealer or your local Power company
11. Power Cord Protection
Power supply cords should not be routed so that They are likely to be walked on or pinched by items placed on or near them
12. Lightning
For added protection, unplug this product from its outlet during a lightning storm. This will prevent damage to the video product due to lightning and power surges
13. Overloading
To avoid the risk of fire and electric shock, do not plug this product into an over-loaded power supply.
14. Object and Liquid Entry
Never push objects into the openings of this product as they may touch dangerous voltage points that may result in fire or electric shock. Never spill a liquid of any kind on this product.
15. Servicing
Do not attempt to service this product yourself as opening or removing covers may expose you to voltage or other hazards. Refer all servicing to qualified service personnel
16. Damage Requiring Service
Disconnect this product from the power supply and refer servicing to qualified service personnel under the following conditions:
a. When the power supply cord or plug is damaged
b. If objects have fallen into the product
c. If the product has been exposed to rain or liquids
d. If the product does not operate normally by following the instruction manual. Adjust only the controls that are covered in the instruction manual as an improper adjustment may result in damage and will often require extensive work by a qualified service technician to restore the product to its normal operation
e. If the product has been dropped or the cabinet has been damaged
f. When the product displays a distinct change in performance - this indicates a need for service
17. Replacement Parts
When replacement parts are required, be sure the technician uses replacement parts specified by the manufacturer. Unauthorized substitutions may result in fire, electric shock, or other hazards.
18. Safety Check
Upon completion of any service to this product ask the service technician to perform safety checks to determine that the product is in proper working condition.
19. Grounding or Polarization
This product is equipped with a three-wire grounding-type plug, a plug having a third (grounding) pin and will only fit into a grounding-type power outlet. This is a safety feature. If you are unable to insert the plug into the outlet, contact your electrician to replace your obsolete outlet. Do not defeat the safety purpose of the grounding-type plug.
20. Power Lines
An outside antenna system should not be located in the vicinity of overhead power lines or other electric light or power circuits, or where it can fall into such power lines or circuits. When installing an outside antenna system, extreme care should be taken to keep from touching such power lines or circuits as contact with them might be fatal.
21. Wall or Ceiling Mounting
The product should be mounted to a wall or ceiling only as recommended by the manufacturer.
22. Heat
The product should be situated away from heat such as radiators, hear registers, stoves, or other products (including amplifiers) that produce heat.

CAUTIONS:

1. All the warnings and instructions of this manual should be followed
2. Remove the plug from the outlet before cleaning. Do not use liquid aerosol detergents. Use water damped cloth for cleaning
3. Do not use this unit in very humid and wet places
4. Keep enough space around the unit for ventilation. Slots and openings of the cabinet should not be blocked.
5. During flashes of lightning or cracks of thunder, or when the system is not used for a long time, unplug the system power supply and disconnect the antenna and cables to protect the unit from lightening or power surges.

FEATURES:

Monitor Features :

- View up to 4 camera locations in real time
- Metal cabinet with 4 camera inputs (4 DIN / 4 BNC and 4 audio RCA)
- 2 way audio
- Single or Dual PIP viewing options – main and PIP channels
- Selectable POP viewing options
- Selectable still frame in Quad or Full screen
- Two times zoom
- Motion Sensing Alarm Function
- Video loss detection warning
- On screen viewing: date*time*camera
- Remote control or main panel operation
- ON/OFF panel switch enables monitor screen to be turned off while recording
- Multi-voltage system 100 – 240Volts

Standard Camera Features :

- 1/4” CCD Color Camera
- Built in speaker and microphone to allow for two way audio communication
- Metal mounting bracket

SYSTEM INCLUDES:

21” COLOR QUAD MONITOR

1 OR 4- 1/4” CCD COLOR PIR* CAMERAS WITH METAL STAND AND 57 FT CABLE

(4 CAMERAS INCLUDED WITH MODELS SY21424-A / SG21244-A
1 CAMERA INCLUDED WITH MODELS SY21421-A / SG21241-A)

* PIR Motion Sensors for the camera are included with models SG21244-A and SG21241-A.

IMPORTANT NOTE: To increase the life of the CRT and to help prevent “burn in” on the monitor, it is strongly recommended that the monitor be set to standby mode when not in use for observation. In standby mode, output to a connected time lapse VCR will continue, though no picture will be displayed on the monitor’s screen.

MONITOR CONTROLS - FRONT PANEL:

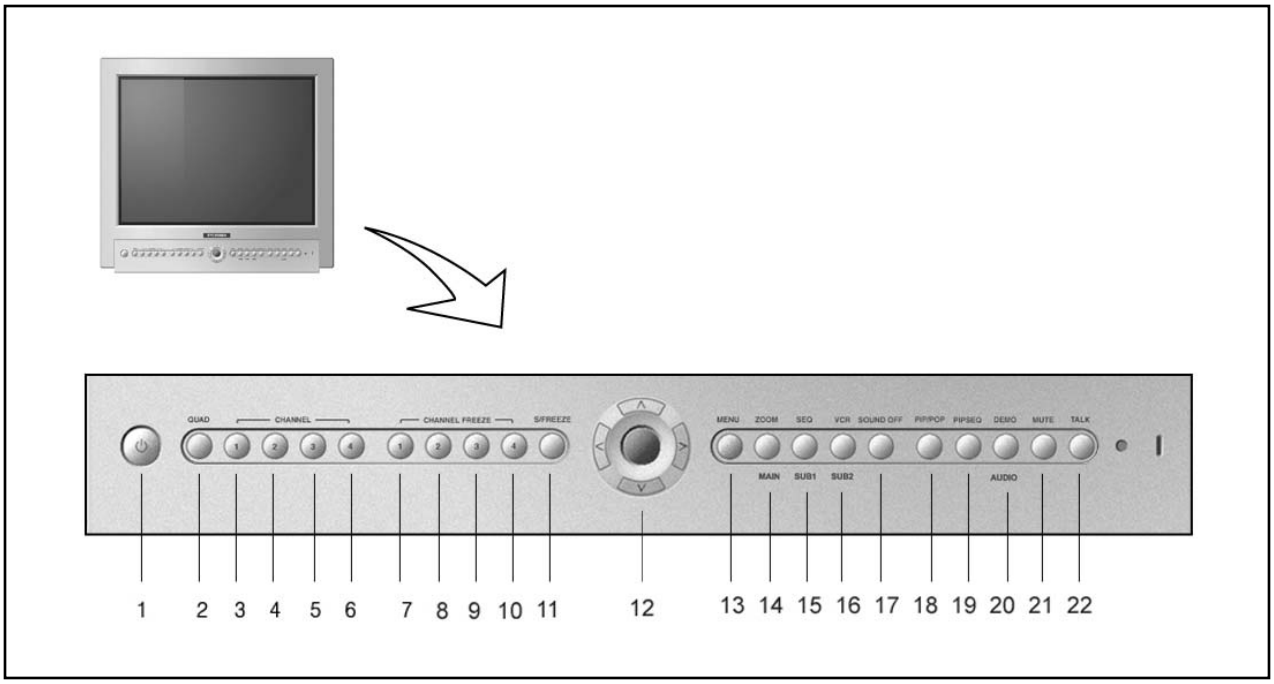

1. **Standby Switch** - Pressing this switch will turn power OFF to the monitor. Pressing it again will turn the power ON. The master power switch, which controls the monitor is located at the back of the unit. Note: The monitor (Standby Switch) can be turned off while recording, provided the master switch is ON.

2. **QUAD Select Button** – Pressing this button displays a Quad screen.

3. **Channel 1** - This button allows the user to go to full-screen display of Camera 1.

4. **Channel 2** - This button allows the user to go to full-screen display of Camera 2.

5. **Channel 3** - This button allows the user to go to full-screen display of Camera 3.

6. **Channel 4** - This button allows the user to go to full-screen display of Camera 4.

7. **Channel Freeze 1** - This button Freezes camera 1 when the monitor is set to full screen mode or in Quad mode. An “F” will appear in the On-Screen Display to indicate that the the Freeze option is ON.

8. **Channel Freeze 2** - This button Freezes camera 2 when the monitor is set to full screen mode or in Quad mode. An “F” will appear in the On-Screen Display to indicate that the the Freeze option is ON.

9. **Channel Freeze 3** - This button Freezes camera 3 when the monitor is set to full screen mode or in Quad mode. An “F” will appear in the On-Screen Display to indicate that the the Freeze option is ON.

10. **Channel Freeze 4** - This button Freezes camera 4 when the monitor is set to full screen mode or in Quad mode. An “F” will appear in the On-Screen Display to indicate that the the Freeze option is ON.

11. **Screen Freeze** - This button Freezes whichever screen you are viewing when you press it. If you set the Screen Freeze in Quad mode, all four cameras will be “frozen”. An “F” will appear in the On-Screen Display.

12. **ARROW KEYS:**

This button serves 3 functions:
a) Changes the channel Up from 1-4
b) Is used to scroll Up in the Menu option screens
c) Moves the screen Up when in Zoom mode

This button serves 3 functions:
a) Changes the channel Down from 4-1
b) Is used to scroll Down in the Menu option screens
c) Moves the screen Down when in Zoom mode

This button serves 3 functions:
a) Turns the Volume Up in default mode
b) Is used to scroll Right in the Menu option screens
c) Moves the screen Right when in Zoom mode

This button serves 3 functions:
a) Turns the Volume Down in default mode
b) Is used to scroll Left in the Menu option screens
c) Moves the screen Left when in Zoom mode

13. **Menu** - A blue screen with 8 options is displayed when you press this button. When in Menu mode, pressing this button selects / changes the option that is highlighted. See Page 9 for a detailed explanation of each menu option.

14. **Zoom / Main** - This button serves 2 functions:
a) **Zoom** - This monitor is equipped with a zoom feature, providing the user the ability to zoom in on a particular location (2 times zoom capability). To utilize this feature proceed as follows:
1) Set the monitor to the desired channel
2) Press the Zoom button.
3) Use the up/down/left/right arrow keys to move the area which the monitor is zooming in on.

4) To exit Zoom Mode, press the Zoom button once again.
Note: the Zoom function is available in PIP/POP mode by holding the Zoom button for 3 seconds.

b) **Main** - Another function of the Zoom/Main button that is used in PIP/POP mode. Refer to the PIP/POP section below for an explanation.

15. Sequence / Sub1

a) **Sequence** - Used to sequence between all camera locations in full screen in sequential order with the screen changing every 3 seconds. The letters SEQ will appear in the on-screen display during sequencing. To change Sequence settings, refer to Page 9.
Note: the Sequence function is available in PIP/POP mode by holding the Sequence button for 3 seconds.

b) **Sub1** - Used in PIP/POP mode. Refer to PIP/POP explanation below.

16. VCR / Sub2

a) **VCR** - This button will change the display from the camera inputs to the VCR Audio/ Video playback and recording signal. To return to the previous screen, press VCR again.
Note: the VCR function is available in PIP/POP mode by holding the VCR button for 3 sec.

b) **Sub2** - Used in PIP/POP mode. Refer to PIP/POP explanation below

17. Alarm Off - This button turns off the alarm sound and sets the system to the previous mode.

18. PIP/POP - This button triggers the Picture-In-Picture and Picture-Out-Picture displays. PIP allows you to view two locations simultaneously, one being the main channel, the other being viewed as a picture in picture. Dual PIP can also be selected, which displays two picture in picture boxes on the main screen. POP divides the screen into 4 screens, with the main channel occupying two-thirds of the screen while the other 3 pictures are divided on the other third of the screen. Refer to the diagrams below that illustrate the difference between PIP, Dual PIP, and POP. Press the PIP/POP button to switch between the two functions. To change these settings, refer to Page 9.

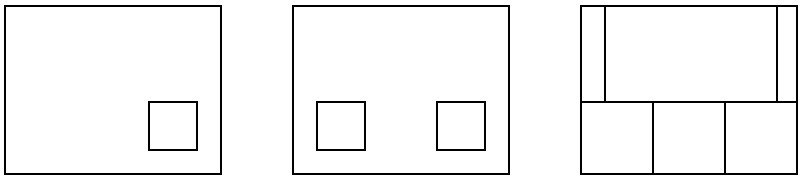

SINGLE PIP DUAL PIP POP

Main - Pressing the Main button while viewing PIP/Dual PIP/POP mode will change the camera location of the main screen being displayed.

Sub1 & Sub2 - Pressing either button in PIP mode changes one of the two camera locations being displayed as a picture in picture, or removes one of two sub pictures to create a Single PIP view. The sub channel pictures first increment from Channels 1-4 when the Sub1 / Sub2 button is pressed, then switch to OFF on the following press of the button.
Note: you cannot turn both sub channels to OFF while in PIP mode.

19. **PIP Sequence** – Pressing this button initiates Sequencing in Single PIP mode. Pressing this button a second time changes the channel of the fixed screen in PIP Sequencing. To exit PIP Sequencing, press the PIP/POP button.
    You can program whether the Main picture or the Sub picture switches during PIP Sequencing via the Menu. Please refer to page 9 for more details.

20. **Audio / Demo** – This button serves two functions.
    a) **Audio** - In Quad mode, the user can select the channel with audio. Pressing this button automatically changes the audio from camera to camera.
    b) **Demonstration** – Holding the Audio/Demo button for 3 seconds starts a sequencing through all the channels using different functions. Firstly the Quad screens are displayed, followed by full-screens, PIP/POP, Freeze, then Zoom. The word DEMO will appear in the top-right corner of the screen. To exit Demo mode, hold the Demo button for 3 seconds.

21. **Mute -** This button cuts off the Volume. To turn the Volume back on, press the button again.

22. **Talk** - By pressing and holding this button the user has the ability to talk to a specific camera location. This button must be pressed the entire time, while talking. To listen to the camera location release the Talk button.

MAIN MENU CONTROL

The Main Menu is pulled up by pressing the Menu button. Scroll up and down through the eight options by pressing the ▲ and ▼ arrow keys. To enter a sub-menu, press the Menu button where the highlighted scroll bar is located. To exit the Main Menu, scroll down to the Exit option and press Menu. Note: in submenus of the Main Menu, you can either exit Menu mode entirely by selecting Exit, or you can return to the Main Menu by selecting Return.

[TIME / DATE SET]
DISP MON : [Y]
DISP REC : [Y]
TIME : 14:35:23
DATE : 02/18/2003
DATE FORMAT: MM-DD-YY
RETURN : [↵]
EXIT : [↵]

1. **Time / Date Set** - This submenu allows you to change the Time and Date displayed on the monitor, and also program how you'd like for the information to appear in the on-screen display.
   i) DISP MON: Selecting [Y] enables on screen display of the date & time Selecting [N] hides this information.
   ii) DISP REC: Selecting [Y] will cause the date & time info to be recorded to tape. Selecting [N] prevents will prevent the on-screen display from being recorded.
   Note: To avoid the VCR's Time/Date OSD to be overlapping during recording or VCR mode, please turn OFF the time/date display on your VCR.
   iii) TIME: Change the time (24 hour clock)
   iv) DATE: Change the date.
   v) DATE FORMAT: There are three formats to display the date:
   MM-DD-YYYY : for U.S.A.
   YYYY-MM-DD : for Asian countries.
   DD-MM-YYYY : for European countries.

2. **Sequence Set** - This menu allows you to select how long you'd like each channel to appear on-screen before automatically switching to the next channel in Sequence mode. The Dwell Time is 0-59 seconds selectable for each of the 8 channels and for Quad mode.
   Note : Channels without a camera, a Video Loss, or a Dwell Time of zero will be skipped in sequencing.

[PIP / POP SET]
PIP SEQUENCE: [SUB]
PIP POSITION : [01]
POP POSITION : [00]
RETURN : [↵]
EXIT : [↵]

3. **PIP/POP Set** - This sub-menu allows you to change the positioning of
   i) PIP/ Dual PIP/POP screens on the monitor, as well as choosing how PIP Sequencing works.
   ii) PIP SEQUENCE: Selecting [SUB] (the default setting) causes the subpicture to rotate between cameras while the Main screen remains fixed during PIP Sequencing. Selecting [MAIN] will make the Main screen rotate while the subpicture remains fixed.
   iii) PIP POSITION: There are four positions in which the sub channels can be set:

[00] [01] [02] [03]

iv) POP POSITION: There are two different viewing options for POP display.

4. **Title Set** – This submenu allows you to change the title of each camera location (up to 8 characters), or remove the titles from the on-screen display.
   DISPLAY: Selecting [Y] will enable the camera titles to appear in the on-screen display. Selecting [N] will remove all titles from appearing in the on-screen display.
   CH 1 - 4: Change the titles of each individual camera.

5. **Alarm Set** – This submenu allows you to enable / disable the camera's PIR Alarm function by channel, and set alarm duration.
   ALARM: Selecting [OFF] disables PIR motion detection from triggering any alarm. Selecting [OSD] will allow alarms to be triggered, and the letters "AL" will appear on the screen of the camera location where the alarm is taking place. A third option, [OSD+BUZZER] will both display "AL" and emit a buzzer sound in the event of an alarm.
   CH 1-4: Set the length of alarm time by channel between 1~59 seconds. Additionally, you can select the Alarm Input. The default setting is OFF – to activate the Alarm on a camera, change the setting to N.O (Normally Open).

   Note: some non-Lorex PIR motion sensors have a default setting of N.C (normally closed). In order to activate the alarm on such a PIR motion sensor, change the setting to N.C.

6. **Motion Set** - This sub-menu allows you to enable / disable the monitor's Pixel-based Motion Sensing feature by channel.
   MOTION: Selecting [OFF] disables Motion Sensing from triggering any alarm. Selecting [OSD] will allow alarms to be triggered, and the letters "MD" will appear on the screen of the camera location where the alarm is taking place. A third option, [OSD+BUZZER] will both display "MD" and emit a buzzer sound in the event of an alarm. The setting that you choose will apply to each camera location.
   CHANNEL: Select which channels will have the Pixel Motion Sensing feature activated. The Sensitivity level can be set to zero for a channel, which will disable the Motion Sensing ability for that channel.
   SENSITIVITY: Select the level of the Motion Sensing's sensitivity level by channel. Level 05 is the highest sensitivity, Level 01 is the least sensitive. Level 00 deactivates Motion Sensing.
   AREA: Select the area of the screen where the Pixel Motion Sensing feature will be active.

7. **System Set** - This sub-menu allows you to configure various preferences on the system.
   KEY BUZZER: When set to [Y], the system will make a sound when a key is pressed on the remote control or on the main panel of the monitor.
   LOSS BUZZER: When set to [Y], the system will make a sound when a camera becomes disconnected.
   QUAD LINE: Activates and deactivates the border line in Quad mode.
   BLANK COLOR: Choose between blue, gray or black as the background screen color in Menu Mode.

VCR OUT: When set to [ACTUAL], the system will output what is shown on the monitor to a VCR. When set to [QUAD], the VCR will record Quad mode, regardless of what's appearing on the screen.

OSD POSITION: Change the location of on-screen display, including the Time/Date, camera titles, and other messages (such as Zoom, Alarm, etc). There are four different positions where the OSD can be placed on-screen.

DEFAULT SET: Selecting [Y] resets all programmed settings, including the date, back to the default factory settings.

8. **Monitor Set** – Adjust the monitor's Contrast, Brightness, Sharpness, Color and Tint. You will see this menu on your camera setting rather than on a blue background, enabling you to see the changes being made to the picture.
   Note: you can switch between Quad and Full Screen views while adjusting the monitor settings by pressing the ◄, ► buttons.

9. **Exit** – Select exit to return to the previous viewing mode.
   Note: 20 seconds of inactivity in Menu mode will also exit the Menu.

MONITOR CONTROLS - BACK PANEL:

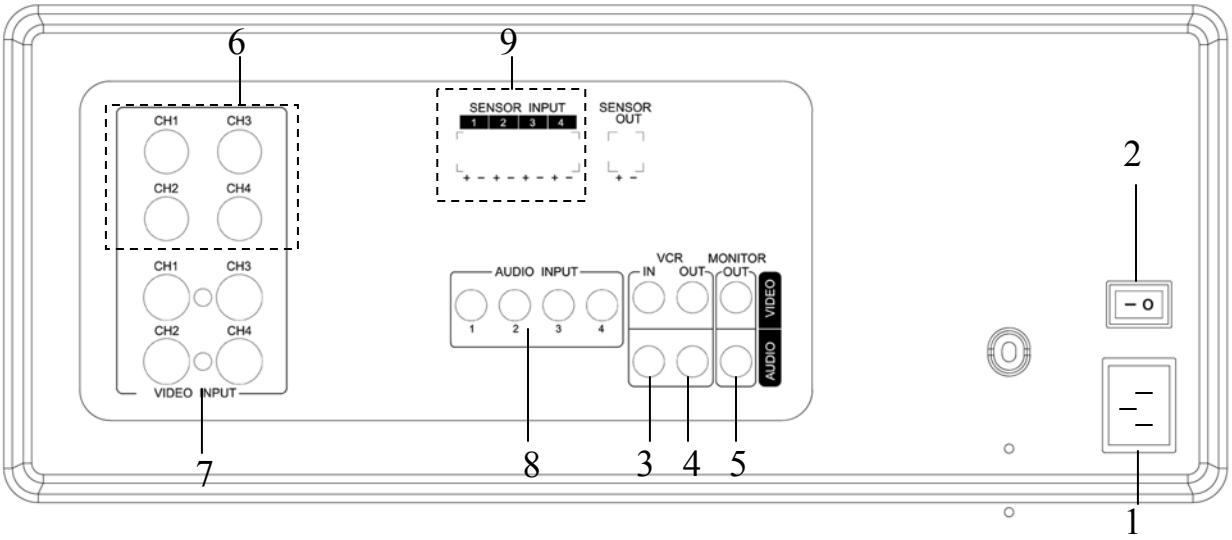

1. **AC Input** - This button is used to connect the supplied power cord from the monitor to an electrical outlet
2. **Power -** This button controls power to the entire unit . Depress the side with the 'I', to turn power ON. Depress the 'O' side to turn the unit OFF
3. **VCR Audio /Video In -** Use with A/V cables (not supplied) to receive audio and video from an external source (VCR)
4. **VCR Audio/Video Out -** Use with A/V cables (not supplied) to transmit audio and video monitor to VCR
5. **Slave Audio/Video Out -** Use with A/V cables (not supplied) for use with a slave monitor
6. **6 Pin Din Camera Inputs -** Channel 1-4 Camera inputs (for cameras with 6 pin din camera inputs)
7. **BNC Camera Inputs -** Channel 1-4 camera inputs (for cameras with BNC Video outputs)
8. **RCA Audio inputs -** Channel 1-4 Audio inputs.(for cameras with RCA Audio output)
9. **Alarm Function Terminals -** These terminals are used to connect external alarm devices such as a motion sensor, door/alarm sensor, or time lapse VCR.

REMOTE CONTROL:

Features of the Remote Control. For more details on specific remote control features, refer to the Monitor features

KEY	FUNCTION DESCRIPTION
	Cuts off the sound from the camera
	Turns Power to monitor ON/OFF
1-4	Allows user to select individual cameras
QUAD	Sets monitor to Quad mode
FRZ 1	Freezes the Full-Screen of Ch 1
FRZ 2	Freezes the Full-Screen of Ch 2
FRZ 3	Freezes the Full-Screen of Ch 3
FRZ 4	Freezes the Full-Screen of Ch 4
FREEZE	Used to freeze the current screen
DEMO	Displays various functions in sequence
CH △	Changes channel up UP Arrow Key in Menu and Zoom
CH ▽	Changes channel down DOWN Arrow Key in Menu and Zoom
VOL ▷	Increases the audio volume RIGHT Arrow Key in Menu and Zoom
VOL ◁	Decreases the audio volume LEFT Arrow Key in Menu and Zoom
MENU	Brings up the Main Menu
PIP/POP	Display either PIP/POP screen
PIP SEQ	Sequence in PIP/POP mode
ZOOM / MAIN	Sets monitor to Zoom feature / Changes Main screen in PIP mode
SEQ / SUB1	Automatic channel scan / Changes sub screen in PIP mode
VCR / SUB2	Sets monitor to VCR mode / Changes second sub screen in PIP mode
AUDIO 1	Selects sound of Channel 1
AUDIO 2	Selects sound of Channel 2
AUDIO 3	Selects sound of Channel 3
AUDIO 4	Selects sound of Channel 4
ALARM OFF	Turns the Alarm sound OFF

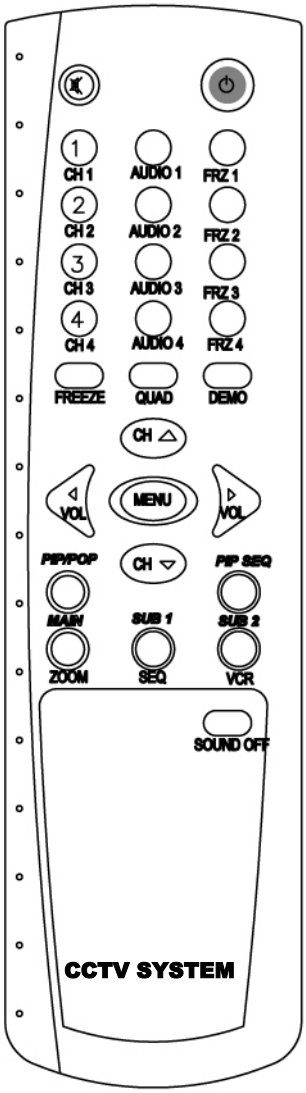

STANDARD WIRED CAMERA:

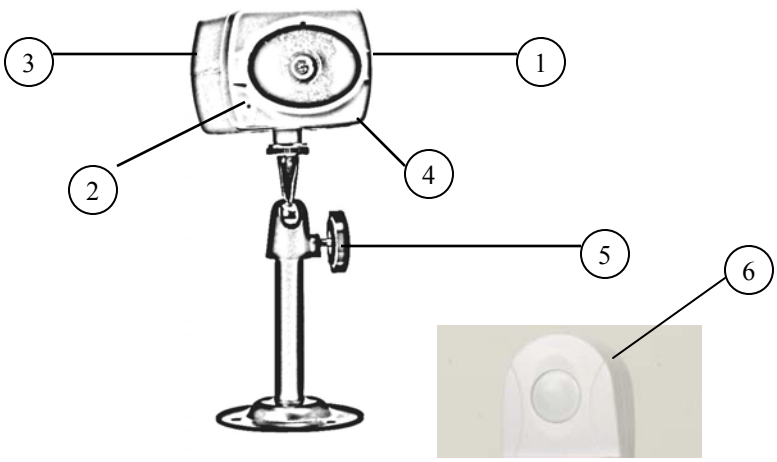

1. Camera Lens – Delivers high quality image by using a 1/4” CMOS Camera
2. Microphone – Picks up sound around the camera
3. Camera Inputs – Connects cable to monitor
4. Speaker – Delivers sound from the monitor to the camera
5. Bracket – Metal bracket connects to camera for mounting to walls, ceilings or table
6. PIR Sensor* - Detects movement / motion

*PIR Motion Sensors are only included with models SG21241-A / SG21244-A

INSTALLATION

A. Camera Unit

Permanent installation using metal camera bracket

1. Attach the Pedestal using 4 screws.	2. Attach the Camera onto the Pedestal and tighten the thumb screw.
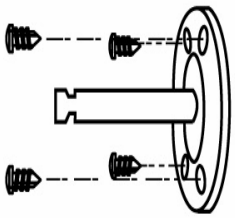	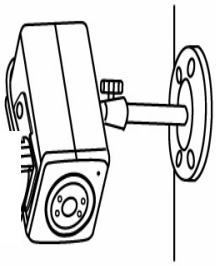

IMPORTANT NOTE:

Keep camera installed away from direct sunlight. Also avoid places where humidity is high or unable to protect rain. The mounting bracket must be attached to a structural device such as wall stud or ceiling rafter using suitable fastener.

MONITOR CONNECTIONS:

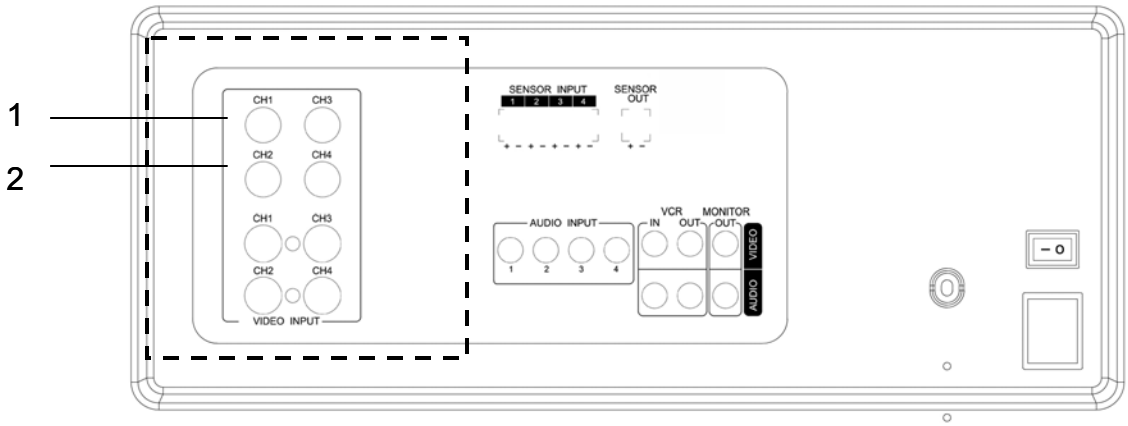

1. Camera 1 Input
   Connect one end of the supplied 65ft cable to the first wired camera, the other end to camera Input 1
2. Camera 2 – 4 Inputs
   Connect optional additional cameras to the camera 2-4 inputs using either the DIN or BNC camera inputs

TROUBLE SHOOTING:

If the system does not function properly, please check the following points.

	PROBLEM	REMEDY
MONITOR	Too dark or bright picture	Readjust the CONTRAST or BRIGHTNESS controls
	NO POWER	Check for AC connection NO POWER
	Poor picture quality	Clean the camera lens. Readjust the CONTRAST or BRIGHTNESS controls
	Picture but no sound	Adjust the VOLUME
	Shrinking picture	Check the condition of the POWER source
WIRED CAMERA	No Picture	Check the cable for any lose connection
	Picture Flickering or Over Exposed	Make sure the camera is not facing any direct light or sunlight

TECHNICAL SPECIFICATIONS:

MONITOR

Picture Tube	21” Color
Horizontal resolution	450 TV Lines
Camera Capable	Up to 4
Quad Speed	30 fps
Camera Input	4 DIN / 4 BNC
Alarm Inputs/Outputs	4 / 1
Input signal	Composite 1 Vp-p, (V:0.714Vp-p, Sync:0.3Vp-p)
Power Source	Multi-voltage (AC100V – 240V)
Power Consumption	105 watts (Maximum)
Operating Temperature	32 °F – 104 ° F (0 ° C – 40 ° C)
Weight	57 lbs (26 kg)
Dimensions:	19.7”(W) x 18.6” (D) x 18.2” (H) (50.0cm (W) x 47.2cm (D) x 46.1cm (H))
Color	White – Metal cabinet

STANDARD CAMERA

Image Device	1/4” CCD image sensor
Resolution	330 TV Lines
Shutter control	Auto 1/60 - 1/100,000
Power requirement	Powered from monitor via cable
Illumination	0.5 LUX @ F2.0
Operating Temperature	-14 °F – 122 °F (-20 °C to 50 °C)
Weight:	12 oz (340 Grams)
Dimensions:	3” (W) x 3.6”(D) x 3.5”(H) (7.6cm (W) x 9.1cm (D) x 8.9cm(H))
Housings:	White

Because our product are subject to continuous improvement, SVC reserves the right to modify product design and specifications without notice and without incurring any obligation. E&OE

OPTIONAL ACCESSORIES

The following accessories are available to add to your existing system.

CABLE

Extends viewing length from Camera to monitor. Available In 65, 100 and 250 ft lengths

TIME LAPSE VCR

Used to record key events. Select From a 40 hour real time or 1280 Hour time lapse VCR

NIGHTVISION

Weatherproof Night vision accessory. Allows you to see in the dark up to 35-40 distance (for use with Observation system cameras)

OBSERVATION CAMERAS

Accessory PIR motion sensor observation system camera with 2 way audio

AUTO PAN

Rotates camera up to 270°

SPECIALTY CAMERAS

Select from a wide assortment Of specialty cameras (dome, Weatherproof, bullet, Waterproof, etc., to suit Individual needs

DIGITAL VIDEO SECURITY SYSTEM

Monitor your office or home remotely over the internet.

SUNSHADE HOUSING

Protects observation camera from the sun

TO ORDER THESE ACCESSORY ITEMS OR FOR A COMPLETE LINE OF ACCESSORIES
www.sylvaniacctv.com

APPENDIX - A
CONNECTING MONITOR TO A STANDARD VCR:

PLEASE SEE THE DIAGRAM BELOW FOR CONNECTING YOUR VCR TO THE MONITOR.

NOTE:
Ensure the Standard VCR's channel is set to A/V Mode in order to ensure reception.
Consult your VCR's Owners Manual to set the VCR to this setting.

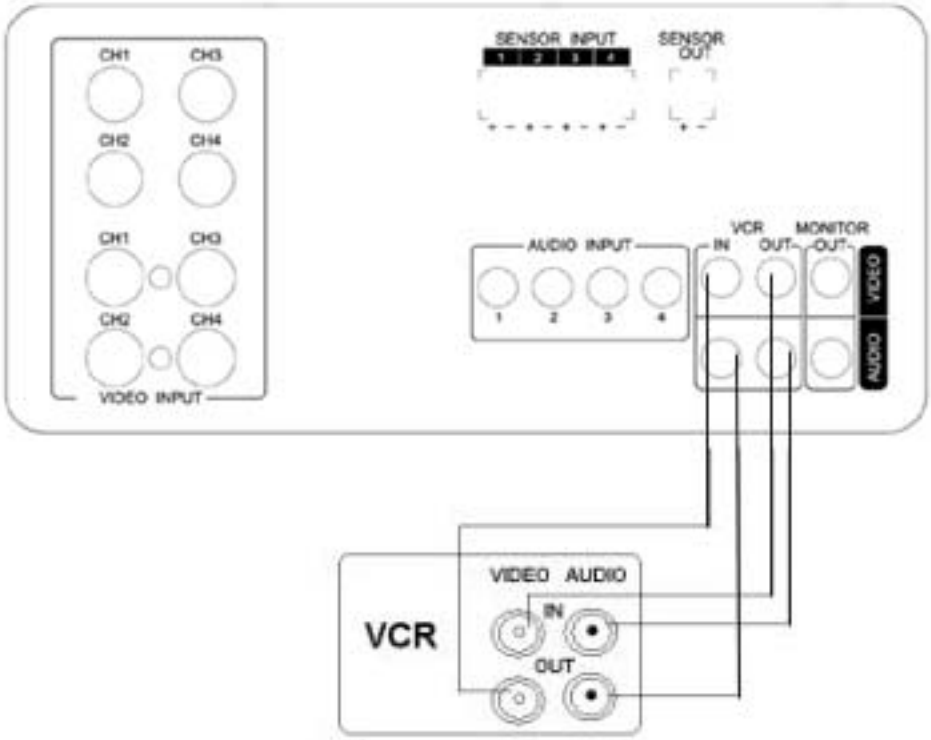

• **Important Note :** To record the video signal only from the monitor
Use the VCR Audio/Video out terminals.

To record the video out signal including on screen
Display features (e.g. Date, Time, Camera identification)
Use the VCR Audio/Video Monitor out terminals.

APPENDIX - B
CONNECTING TO A SLAVE MONITOR:

Connections to another monitor (e.g. Slave Monitor) can be made through “MONITOR OUT” As show in the diagram below.

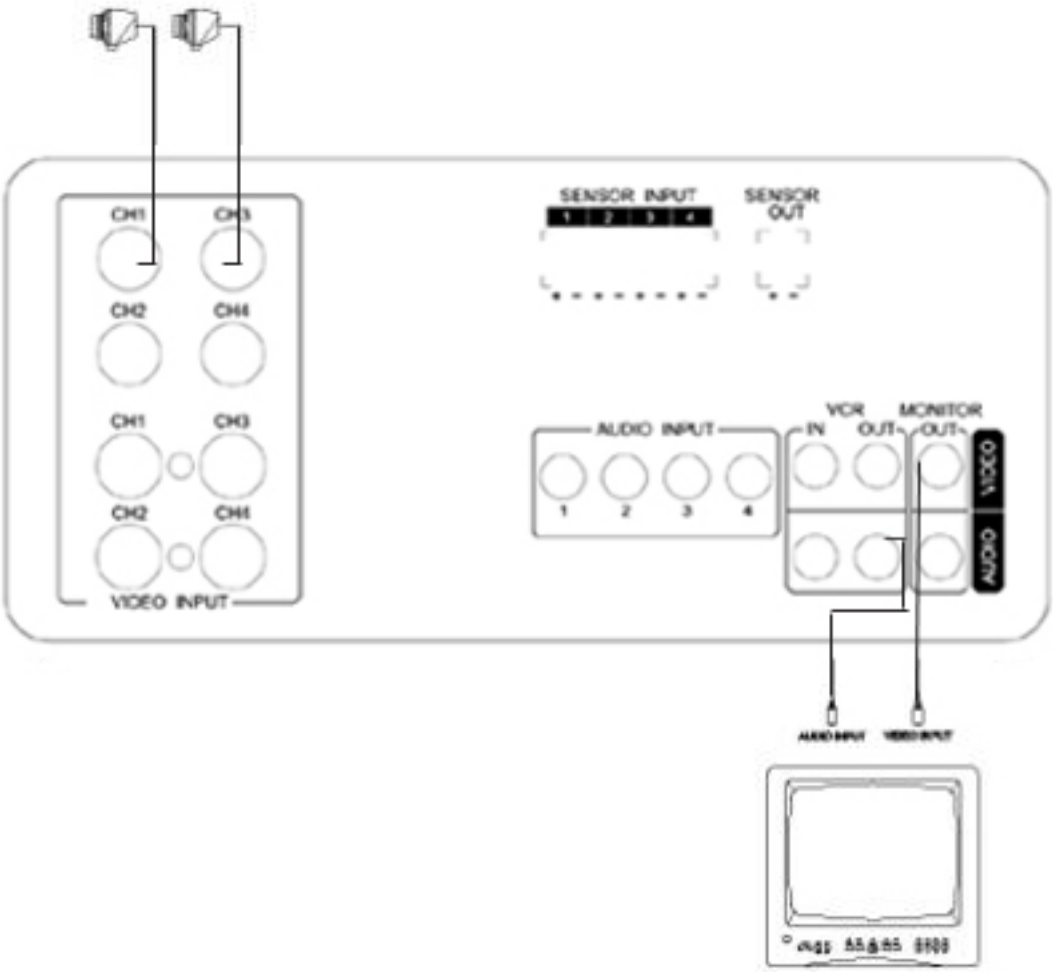

APPENDIX - C
CONNECTING TO A LOREX TIME LAPSE VCR FOR ALARM RECORDING:

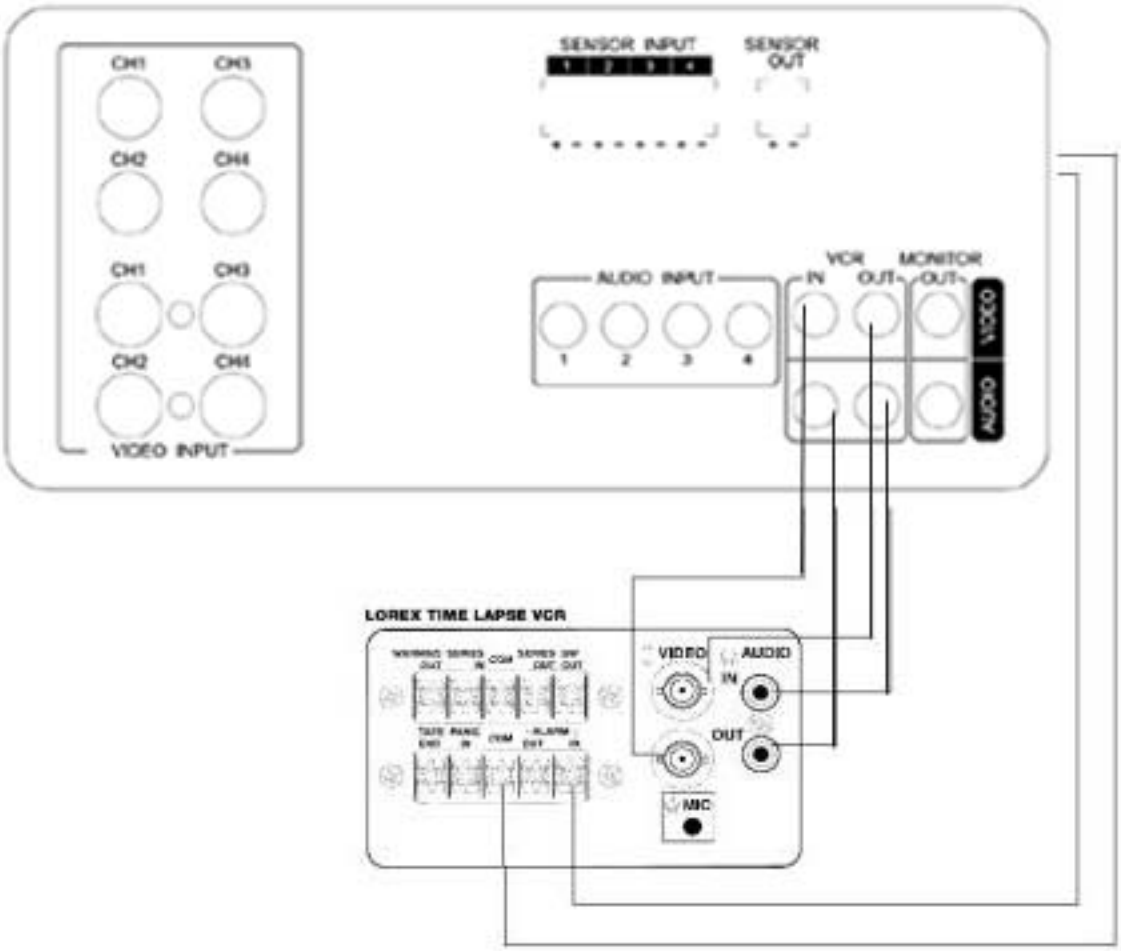

CARE AND MAINTENANCE:

Please follow the following instructions to ensure proper care and maintenance of this system

Keep your monitor and camera dry. If it gets wet, wipe it dry immediately.

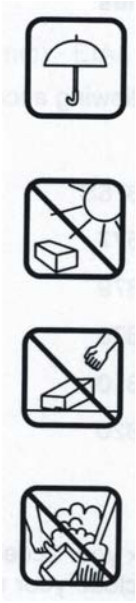

Use and store your unit in normal temperature environment. Extreme temperatures can shorten the life of the electronic devices.

Handle the monitor carefully. Dropping it can cause serious damage to the unit.

Occasionally clean the unit with a damp cloth to keep it looking new. Do not use harsh chemicals, cleaning solvents, or strong detergents to clean the unit.

Keep the unit away from excessive dirt and dust. It can cause premature wear of parts.