INSTRUCTION MANUAL

2.4 GHZ WIRELESS VIDEO SENDER

This product broadcasts over public airwaves and its video and audio signals may be intercepted without your consent.

FOR MORE INFORMATION

WWW.STRATEGICVISTA.COM

Before operating the system, please read this manual thoroughly and retain it for future reference.

CAUTION

RISK OF ELECTRIC SHOCK. DO NOT OPEN.

CAUTION: TO REDUCE THE RISK OF ELECTRIC SHOCK, DO NOT REMOVE COVER (OR BACK). NO USER-SERVICEABLE PARTS INSIDE. REFER SERVICING TO QUALIFIED SERVICE PERSONNEL.

Explanation of two Symbols

The lightning flash with arrowhead symbol, within an equilateral triangle, is intended to alert the user to the presence of uninsulated "dangerous voltage“ within the product's enclosure that may be of sufficient magnitude to constitute a risk of electric shock to persons.

The exclamation point within an equilateral triangle is intended to alert the user to the presence of important operating and maintenance(servicing) instructions in the literature accompanying the appliance.

THE GRAPHIC SYMBOLS WITH SUPPLEMENTAL MARKING ARE ON THE BOTTOM OF THE SYSTEM.

WARNING: To prevent fire or shock hazard, do not expose this unit to rain, water, or wet locations. Do not insert any metallic object through the ventilation grills.

FCC CLASS B NOTICE

Note:
This equipment has been tested and found to comply with the limits For a Class B digital device, pursuant to Part 15 of the FCC Rules. These limits are designed to provide reasonable protection against harmful interference in a residential installation. This equipment generates, uses and can radiate radio frequency energy and, if not installed and used in accordance with the instruction, may cause harmful interference to radio communications. However, there is no guarantee that interference will not occur in a particular installation. If this equipment does cause harmful interference to radio or television reception, (which can be determined by turning the equipment off and on), the user is encouraged to try to correct the interference by one or more of the following measures:

- Reorient or relocate the receiving antenna
- Connect the equipment into an outlet on a circuit different from that to which other devices may be connected.
- Consult the dealer or an experienced radio or television technician for help.
- Complies with Industry Canada 210

SAFETY INSTRUCTIONS

IMPORTANT SAFEGUARDS
All the safety and operating instructions should be read before the system is operated, and retained for future reference.

1. **HEED WARNINGS** - All warnings on the appliance and in the operating instructions should be adhered to.
2. **FOLLOW INSTRUCTIONS** - All operating instructions should be followed.
3. **WATER AND MOISTURE** - Do not use this video product near water – for example, a bath tub, wash bowl, kitchen sink, laundry tub or swimming pool, or in a wet basement.
4. **POWER SOURCES** - This product should be operated only from the type of power source indicated on the marking label.
5. **OVERLOADING** - Do not overload outlets and extension cords, which can result in a risk of fire or electric shock.
6. **SERVICING** - Do not attempt to service this product yourself. Opening or removing covers may expose you to dangerous voltage or other hazards. Refer all servicing or repairs to qualified service personnel.
7. **DAMAGE REQUIRING SERVICE** - Unplug this product from the wall outlet and refer servicing or repairs to qualified service personnel under the following conditions:
   a. When the power supply cord or plug is damaged.
   b. If liquid has been spilled or objects have fallen into the product.
   c. If the product has been exposed to rain or water.
   d. If the product does not operate normally by following the operating instructions. Adjust only those controls that are covered by the operating instructions.
   e. If the product has been dropped or the cabinet has been damaged.
   f. When the product exhibits a distinct change in performance.
8. **REPLACEMENT PARTS** - When replacement parts are required, be sure the service technician has used replacement parts that are specified by the manufacturer or have the same characteristics as the original part. Unauthorized substitutions may result in fire, electric shock, or other hazards.
9. **SAFETY CHECK** - Upon completion of any service or repairs to this video product, ask the service technician to perform safety checks to determine if the video product is in proper operating condition.
10. **An appliance and cart combination should be moved with care.** Do not place this equipment on an unstable cart, stand, or table.The equipment may fall, causing serious injury to a child or adult, and serious damage to the equipment. Wall or shelf mounting should follow the manufacturer's instructions and should be done with a mounting kit approved by the manufacturer.

TABLE OF CONTENTS

PAGE

INTRODUCTION & FEATURES…… 1

SYSTEM INCLUDES…… 2

CONTROLS AND FUNCTIONS
- Wireless Transmitter…… 3
- Wireless Receiver…… 4

INSTALLATION OF WIRELESS TRANSMITTER…….. 5

INSTALLATION OF WIRELESS RECEIVER
- Operation with TV (Using RCA Cables)…… 6
- Operation with TV (Using Coaxial Cable) …… 7
- Operation with TV and VCR…… 8

SYSTEM OPERATION
- Multiple Devices / Manual Options …… 9

TROUBLE SHOOTING …… 10

TECHNICAL SPECIFICATIONS …… 11

CARE & MAINTENANCE…… 12

INTRODUCTION:

Thank you for purchasing the 2.4 GHz 4 Channel Wireless Video Sender. This system easily connects to any TV, allowing you to view your satellite, DVD or security Camera from another room, up to a distance of 300 ft away (open space). Avoiding the hassle of running wires, this system is easy to install and operate for immediate applications.

The RCA audio/video outputs also allow you to connect a time lapse VCR or standard VCR for recording purposes.

To learn more about this 2.4GHz Wireless Video Sender and our complete range of CCTV products, please visit our website at:

www.strategicvista.com

FEATURES:

- Send signal to a second TV Satellite, DVD, or Security Camera
- View video from another room
- 300 ft Wireless Transmission (open space)
- 2.4 GHz Wireless Transmission
- Crystal clear Video and Stereo audio
- 4 Channel Wireless System

SYSTEM INCLUDES:

1 - 2.4 GHz Wireless Receiver
1 - 2.4 GHz Wireless Transmitter

Owner's Manual

Also includes:
2 – 9V DC 500mA Adapters
2 – RCA Audio/Video Cables
1 – Coaxial Cable

CONTROLS & FUNCTIONS

WIRELESS TRANSMITTER

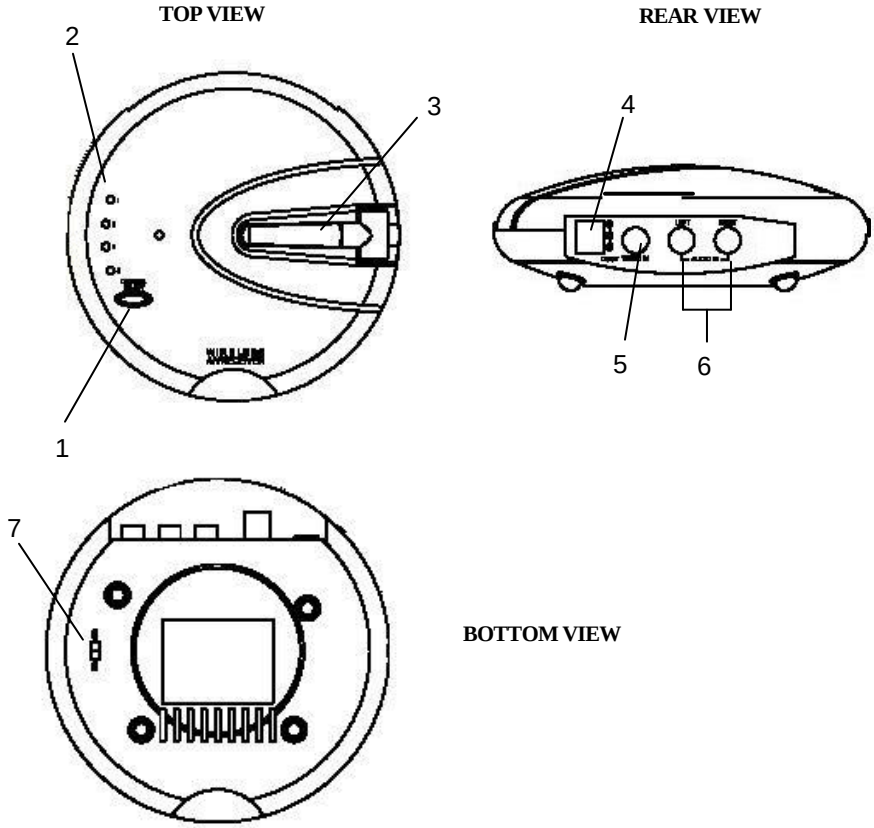

Location of Transmitter controls

1. **Channel Selector Button –** Used to select between channels 1-4
2. **LED Channel Indicators –** Indicator light shows selected channel
3. **2.4 GHz Antenna –** High gain dipole antenna transmits audio and video signal to the wireless receiver
4. **DC IN Jack –** Power source for the transmitter
5. **Video Input Jack (Yellow) –** RCA jack for video input connector
6. **Audio Input Jacks L (White) & R (Red) –** RCA jacks for audio input connector
7. **ON/OFF Power Switch –** Ensure this switch is set to OFF before plugging the system into an electrical outlet

CONTROLS & FUNCTIONS

WIRELESS RECEIVER

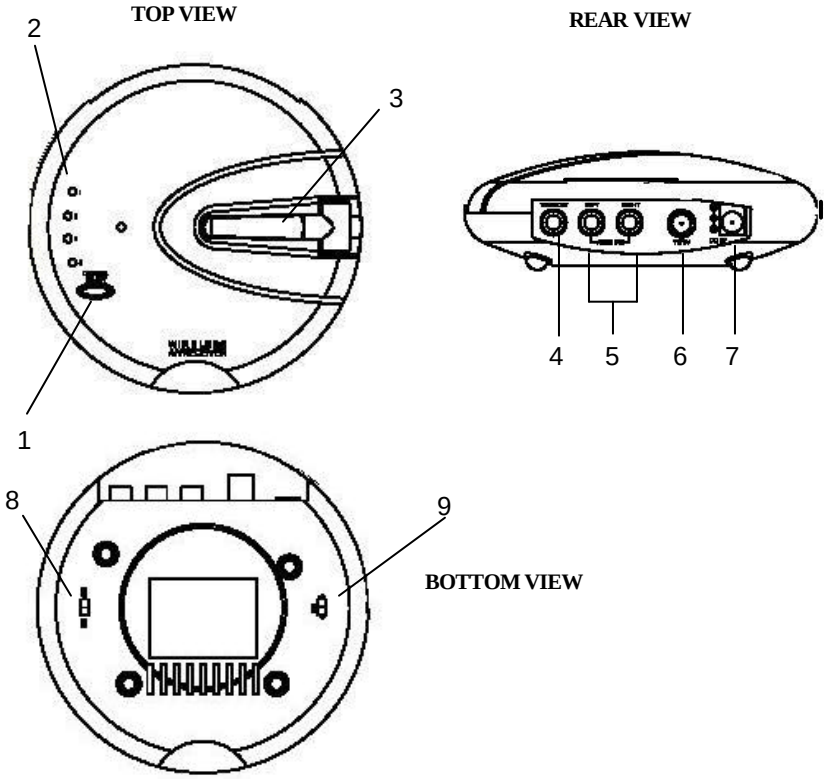

Location of Receiver controls

1. **Channel Selector Button –** Used to manually switch channels from 1-4
2. **LED Channel Indicators –** Indicator light shows selected channel
3. **2.4 GHz Antenna –** High gain dipole antenna receives audio and video signal from the wireless transmitter
4. **Video Output Jack (Yellow) –** RCA jack for video output connector (when using RCA connector)
5. **Audio Output Jacks L (White) & R (Red) –** RCA jacks for audio output connector (when using RCA connector)
6. **RF Out Jack (To TV) –** Connect the receiver to a TV using the supplied coaxial cable**.** (alternative to RCA cable connection)
7. **DC IN Jack –** Power source for the receiver
8. **ON/OFF Power Switch –** Ensure this switch is set to OFF before plugging the system into an electrical outlet
9. **Channel 3/4 Selector Switch –** Used to view picture on television when using coaxial cable (preset to channel 3)

INSTALLATION OF TRANSMITTER

CONNECTING A TRANSMITTER SIGNAL FROM YOUR VCR/ SATELLITE/DVD

STEP 1:

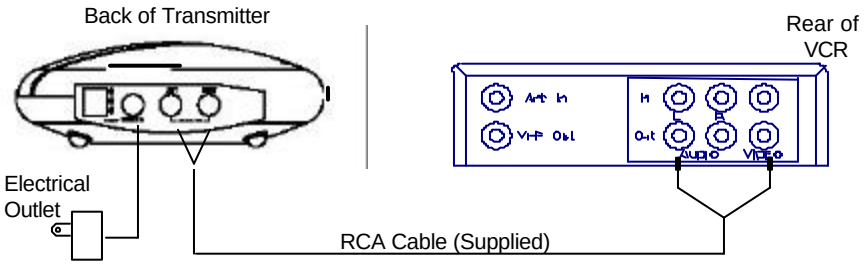

NOTE Ensure the Power Switch on the Transmitter is turned OFF prior to proceeding with the following steps.

1. Connect one end of the RCA cables to the Audio/Video Input jacks of the Transmitter; the other end to the Audio/Video Out jacks of the VCR/Satellite/DVD. Ensure that the yellow, red and white plugs match the yellow, red and white jacks on both the VCR/Satellite/DVD and the Transmitter.

2. Plug one end of the supplied power adapter (9V 500 mA adapter) into the back of the transmitter; the other end into an electrical outlet. The system is defaulted to channel 1.

INSTALLATION OF RECEIVER

CONNECTING A RECEIVER TO A REMOTE TV USING RCA CABLES

STEP 2:

You have two options to connect the Receiver: A) Using RCA Cables (see below), or B) Coaxial Cables, please refer to page 7 of this manual.

A)

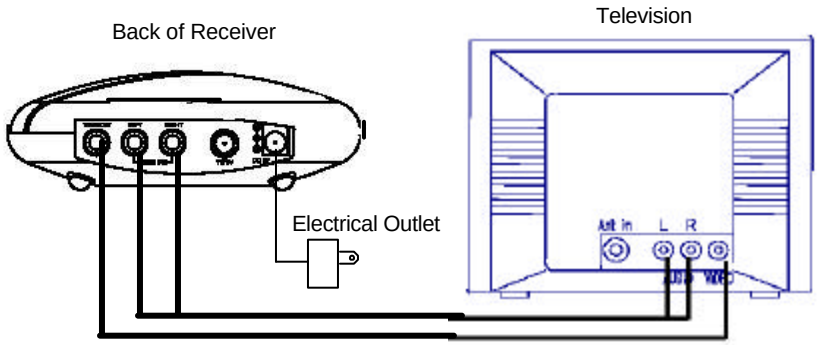

NOTE Ensure the Power Switch on the Receiver is turned OFF before proceeding with the following steps.

1. Place the wireless receiver near your television (or monitor).

2. Connect one end of the RCA cables to the Audio/Video output jacks at the back of the Receiver. Plug the other end of RCA cables into the Audio/Video In jacks on your television. Be sure the yellow, red and white plugs match the yellow, red and white jacks on both the receiver and TV.

3. Connect one end of the supplied 9V 500 mA AC adapter into the DC IN jack at the rear of the receiver; the other end into an electrical outlet. Turn the receiver ON. The system is defaulted to channel 1.

4. Turn your T.V. to AX (Aux. Mode or TV/Video) to view the picture on your second T.V.

5. Adjust the antenna on both the transmitter and receiver as necessary for optimum viewing.

NOTE For optimum viewing reception you may need to change the channels of both your transmitter and receiver to the same channels between CH 1 – CH 4

INSTALLATION OF RECEIVER

CONNECTING A RECEIVER TO A T.V. USING COAXIAL CABLES

B)

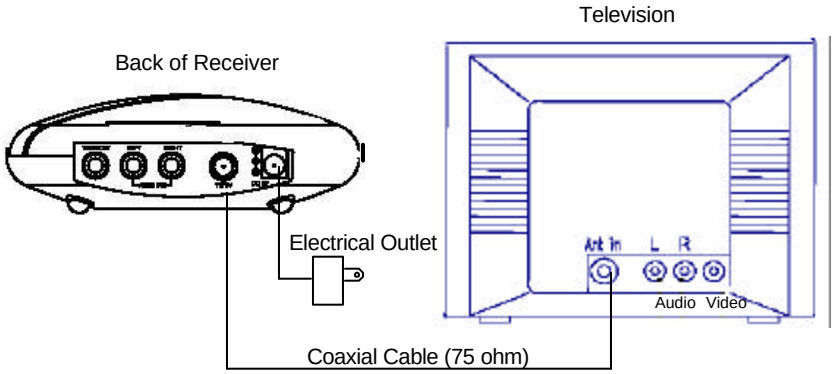

NOTE Ensure the Power Switch on the Receiver is turned OFF prior to proceeding with the following steps.

1. Place the wireless receiver near your television (or monitor).

2. Connect one end of the coaxial cable to the back of the Receiver. Plug the other end of the coaxial cable to the television.

3. Connect one end of the supplied 9V 500 mA AC adapter into the DC IN jack at the back of the receiver; the other end into an electrical outlet. Turn the receiver ON. The system is defaulted to channel 1.

4. Search channels 1 through 4 by using Channel Selector Switch on the Receiver and Transmitter.

5. Turn your T.V. to channel 3 to view the picture from your second T.V.

6. Adjust the antenna on both the transmitter and receiver as necessary for optimum viewing.

NOTE For optimum viewing reception you may need to change the channels of your transmitter and receiver to the same channels between CH1 – CH 4

INSTALLATION OF RECEIVER

CONNECTING A RECEIVER TO A REMOTE TV THROUGH A VCR

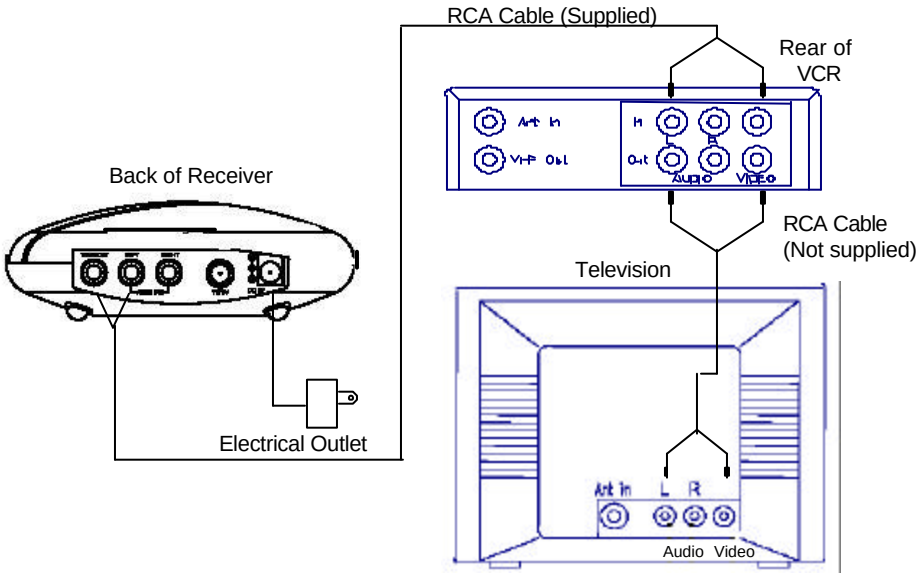

NOTE Ensure the Power Switch on the Receiver is turned OFF before proceeding with the following steps.

1. Connect one end of the RCA cables to the Audio/Video output jacks located at the rear of the Receiver. Plug the other end of the RCA cables into the Audio/Video In jacks on your VCR.

2. Connect one end of other RCA cables to the Audio/Video jacks on your Television. Plug the other end of the RCA cables into the Audio/Video Out jacks on your VCR.

3. Turn both the Transmitter and Receiver 'ON'. Set your TV to Video mode to view the signal from the T.V. (Consult your televisions owners manual on setting the Television to Video (Aux) mode.

4. Turn your T.V. to AX (Aux. Mode) to view the picture on your second T.V.

5. Adjust the antenna direction on both the transmitter and receiver as necessary for optimum viewing.

NOTE For optimum viewing reception you may need to change the channels of your transmitter and receiver to the same channels between CH 1 – CH 4.

SYSTEM OPERATION

CONNECTING MORE VIDEO DEVICES TO YOUR SYSTEM (MAX. OF 4)

The Video Sender system allows you to connect more than 1 transmitter and receiver. Connecting more than one transmitter to the system is normally utilized when viewing multiple Video sources on a television or monitor. You also have the option to connect multiple receivers to this system for viewing your Satellite/DVD picture from multiple rooms.

MANUAL VIEWING OPTIONS

To manually view a specific transmitter press the Ch. Select key to view the desired video source location. (Channel 1-4)

TROUBLESHOOTING

If the system does not function properly, check the following points before contacting the service center.

Problems	Causes & Remedies	
	Video Source	Receiver/Transmitter
No power (no picture/sound)	- Video source/ device not connected to transmitter - AC adapter not plugged in - Power switch not turned ON	-AC adapter not plugged in - Power switch not turned on - TV or Monitor not turned on - Improper A/V or coaxial cable connection
Poor Reception	- Video source/device not connected to transmitter - AC adapter not plugged in - Power switch not turned ON	- Adjust antenna direction - Improper channel 1-4 selection
Picture flickering **Picture too bright or too dark**	- Strong spot light in the field of view - Lighting source in the field of view	- Adjust brightness control on TV/monitor
Picture rolls and jumps or scrambled picture	- Adjust antenna direction	- Adjust antenna direction

FOR MORE INFORMATION, VISIT OUR WEBSITE AT:
www.strategicvista.com

TECHNICAL SPECIFICATIONS

WIRELESS TRANSMITTER

Power supply	AC adapter 9V DC 500mA output
Current consumption	150 mA TYP.
Channel frequency	2.411 – 2.473 GHz
Channel selection	4 channel
Modulation system	FM modulation
Video channel	1
Video input level	1 Vpp @ 75 Ohm
Audio channel	1
Audio input level	1 Vpp @ 600 Ohm
Antenna type	Dipole
LED indicator	Power
Dimensions	5.25”(Diameter) x 1.5” (Height)
Weight	136 grams or 4.8 Oz

WIRELESS RECEIVER

Receiving frequency	2.411GHz - 2.473GHz (4CH)
Output level	1.0Vp-p(Video), 3.0Vp-p(Audio)
Sensitivity	> 85 dBm
Antenna	Dipole antenna
Operating temperature	-14º to + 122º F or (-10ºC to + 50 ºC)
Power source	9V 500mA DC Adapter
Dimensions	5.25”(Diameter) x 1.5” (Height)
Weight	181 grams or 6.4 Oz

As our products are subject to continuous improvement, SVII and its subsidiaries reserve the right to modify product design, specifications and prices, without notice and without incurring any obligation. E&OE

CARE AND MAINTENANCE:

Please follow these instructions to ensure proper care and maintenance of this system

Keep your monitor and camera dry. If it gets wet, wipe it dry immediately.

Use and store your unit in normal temperature environment. Extreme temperatures can shorten the life of the electronic devices.

Handle the monitor carefully. Dropping it can cause serious damage to the unit.

Occasionally clean the unit with a damp cloth to keep it looking new. Do not use harsh chemicals, cleaning solvents or strong detergents to clean the unit.

Keep the unit away from excessive dirt and dust. It can cause premature wear of parts.