VI350

Instruction Manual

English Version1.0

VI350 EXPANDABLE VIDEO DOORPHONE SYSTEM

(WITH HANDS-FREE INTERCOM)

Copyright © 2006 Lorex Technology Inc

www.homesentinel.com

Table of Contents

FCC Class B Notice 3
1 Safety Warnings and Precautions 4
1.1 Important Safety Instructions 4
1.2 Warnings 5
1.2.1 Explanation of Symbols 5
1.3 Precautions 6
2 Introduction 7
2.1 System Contents 7
2.2 Features 7
3 The Video Doorphone System 8
3.1 The Monitor Station 8
3.2 Monitor Terminal Connections 10
3.3 The Doorphone Camera 12
3.4 Camera Terminal Connections 13
4 Installation 15
4.1 Additional Door Camera Set-up 16
4.2 Video Doorphone Operation 16
5 Video Doorphone Expansion Options 18
5.1 The MO 350 Monitor 19
5.1.1 MO 350 Monitor Installation 22
5.1.2 MO 350 Monitor Operation 22
5.2 The CA 350 Outdoor Camera 23
5.2.1 CA 350 Outdoor Camera Installation 23
5.2.2 CA 350 Outdoor Camera Operation 23
5.2.3 The Door Release Function 23
6 Troubleshooting Guide 25
7 Specifications 26
8 APPENDIX #1 27
8.1 Connect Electric Door Strike or Magnetic Lock (optional) 27
9 APPENDIX 2 29
9.1 Connect the Video Doorphone System with Existing Wiring 29

FCC Class B Notice

This equipment has been certified and found to comply with the limits regulated by FCC, EMC and LVD. Therefore, it is designed to provide reasonable protection against interference and will not cause interference with other appliance usage. However, it is imperative that the user follows this manual's guidelines to avoid improper usage which may result in damage to the unit, electrical shock and fire hazard or injury. In order to improve the feature functions and quality of this product, the specifications are subject to change without notice from time to time.

This equipment has been tested and found to comply with the limits For a Class B digital device, pursuant to Part 15 of the FCC Rules. These limits are designed to provide reasonable protection against harmful interference in a residential installation. This equipment generates, Uses and can radiate radio frequency energy and, if not installed and used in accordance with the instruction, may cause harmful interference to radio communications. However, there is no guarantee that interference will not occur in a particular installation. If this equipment does cause harmful interference to radio or television reception, (which can be determined by turning the equipment off and on), the user is encouraged to try to correct the interference by one or more of the following measures:

- Re-orient or relocate the monitor unit
- Increase the separation between the monitor and camera.
- Connect the equipment on a separate outlet
- Consult the dealer or an experienced radio or television technician for help

1 Safety Warnings and Precautions

1.1 Important Safety Instructions

WARNING

TO REDUCE THE RISK OF FIRE OR ELECTRIC SHOCK

DO NOT EXPOSE THIS APPLIANCE OR POWER ADAPTER TO WATER OR MOISTURE

Read Instructions – All the safety and operating instructions should be read before operating this equipment. These instructions should be retained for future reference

Heed Warnings – All warnings on the equipment and in the operating instructions should be adhered to. All instructions regarding care and operation of this equipment should be followed.

Power Sources – Equipment should only be connected to the power supply specified in the operating instructions or as marked on the equipment.

Power-Cord Protection – Keep cable cords and plugs clear of other objects, particularly at the point where they exit the equipment.

Cleaning – Clean the equipment by wiping with a soft cloth, (do not use any abrasive agents or water).

Non-use Periods – Power cords should be unplugged from the outlet when left unused for a long period of time.

Object and Liquid Entry – Take care not to drop objects or liquids on any part of the equipment.

Damage Requiring Service – The unit should be serviced by a qualified service personnel when:

- The power-supply cord or the plug has been damaged; or
- Objects have fallen, or liquid has been spilled onto the equipment; or
- The equipment has been exposed to rain; or
- The equipment does not appear to operate normally or exhibits a
- marked change in performance; or
- The equipment has been dropped, and/or the enclosure has
- been damaged

Servicing – Do not attempt to service the appliance beyond that described in the operating instructions. All other servicing should be referred to a Qualified Distributor's Service Personnel.

1.2 Warnings

CAUTION

RISK OF ELECTRIC SHOCK

TO REDUCE THE RISK OF ELECTRIC SHOCK, DO NOT REMOVE COVER (OR BACK) NO USER-SERVICEABLE PARTS INSIDE. REFER SERVICING TO QUALIFIED SERVICE PERSONNEL

1.2.1 Explanation of Symbols

The lightning flash with arrowhead symbol, within an equilateral triangle, is intended to alert the user to the presence of un-insulated "dangerous voltage" within the product's enclosure that may be of sufficient magnitude to constitute a risk of electric shock to persons.

The exclamation point within an equilateral triangle is intended to alert the user to the presence of important operating and maintenance (servicing) instructions in the literature accompanying the appliance.

NOTE THE GRAPHIC SYMBOLS WITH SUPPLEMENTAL MARKING ARE ON THE BOTTOM OF THE SYSTEM.

WARNING

TO PREVENT FIRE OR SHOCK HAZARD

DO NOT EXPOSE THE UNIT TO RAIN OR MOISTURE

1.3 Precautions

- Use only the power adapter supplied with the system. The use of any other power adapter may cause damage to the system which is not covered under warranty.
- Keep it dry. If water should get on it, wipe it off immediately. Water contains minerals that can corrode electronic circuits.
- Do not use or store in area of high levels of dirt or dust. The electronic circuit may be contaminated, and any moving parts will wear prematurely.
- Avoid installing the monitor directly into the sun or in any other intensely bright locations.
- Do not install the monitor in areas where it may be exposed to excessive moisture or extreme temperatures.
- Do not install near corrosive chemicals or harmful gases.
- Before installing the system completely, it is a good idea to check for proper operation by temporarily connecting the monitor to the camera and powering up units.

2 Introduction

Thank you for purchasing the Home Sentinel Video Doorphone entry system. This model allows you to identify and communicate with callers at the door, from the security and convenience of any room in your home. Visitors activate the system by pressing a call button on the outdoor camera, which sounds a doorbell chime as well as turning on the inside video monitor. A 2-way audio intercom then lets you speak with visitors after first visually identifying them. It consists of a monitor station and an outdoor camera unit. Expansion is possible to include up to 4 monitors and 2 outdoor camera stations.

For proper usage and application, please read the instruction manual completely.

2.1 System Contents

- Monitor Station
- AC adapter
- Outdoor Camera Station
- Mounting Hardware Kit
- 65 ft. Cable
- Owner's Manual

2.2 Features

- High definition 4" flat screen CRT
- Hands free with 2 way audio intercom between outdoor camera stations and monitors
- Expansion camera setup
- Auto shut off after 30 seconds for unanswered calls and 90 seconds for answered calls
- Remote door open function (requires optional electric door strike)
- High resolution 1/3" B/W CCD image sensor camera
- Wide angle lens with auto iris adjustments
- Infrared illumination for clear night vision (0 lux) at close range
- The system can be expanded with up to 4 monitors and up to 2 outdoor camera units.

3 The Video Doorphone System

The video doorphone system is designed to identify and commnunicate with callers at the door from the security of your home.

The Monitor Station and Camera are the main components of the system.

3.1 The Monitor Station

The Monitor Station comprises functional buttons, controls and a B&W screen.

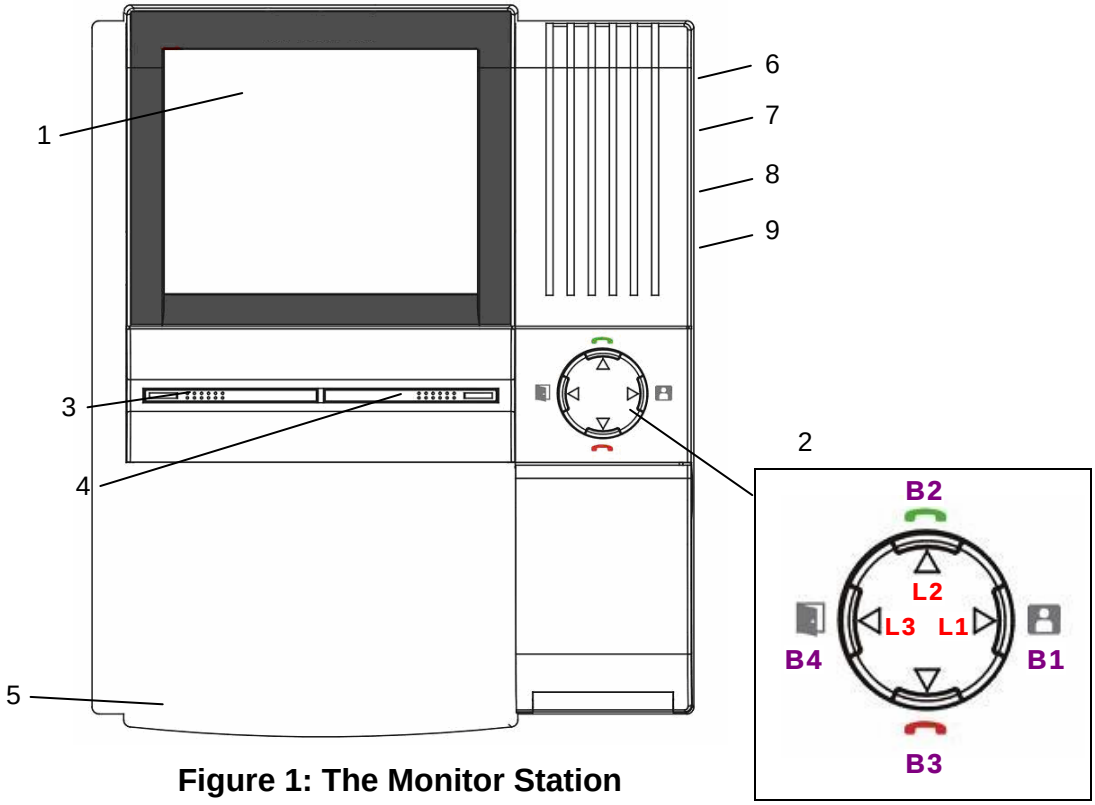

Figure 1: The Monitor Station

The following buttons, controls and screen display are located on your Monitor Station:

1 4” B/W flat type CRT screen: Displays image delivered from the door camera

2 Function button for Monitor/ Intercom/ Door Open and Cut off, see *Figure 1*, and refer to the chart on the next page for further descriptions.

	LED Light		Button Name	Press This Button To
L1	ON while the monitor displays video	**B1**	Monitor	Manually monitor camera locations (press multiple times to navigate between camera locations)
L2	ON while the intercom is activated	**B2**	Intercom	Call other monitoring station for intercom function between monitors (additional monitors required). Intercom time is 90 seconds before cut-off (10 sec if no response)
L3	ON while the system has power	**B4**	Door Open	Release door strike (open door - accessory door strike required). If the monitor is not online, this button has no effect
		B3	Cut Off	End function. If the monitor is not online this button has no effect

3 Speak-out button (one way): While this button is pressed, you can talk and the visitor can only listen in at the camera location

4 Speakerphone button (two way): When this button is pressed it allows for two way conversation between the monitor and the camera unit.

5 Microphone: Picks up sound around the monitor.

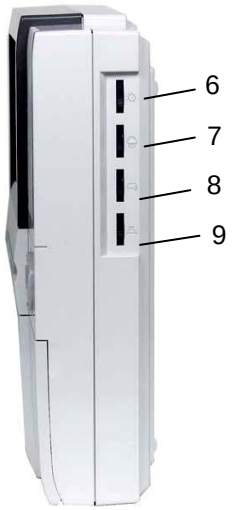

Figure 2: Monitor Side

6 Brightness control: Allows you to control the brightness of the picture.

7 Sharpness control: Allows you to control the sharpness of the picture

8 Bell volume control: Allows you to adjust the bell volume on the monitor

9 Speakerphone volume control: Allows you to adjust the the volume for two way conversation

3.2 Monitor Terminal Connections

The Monitor Station terminal connections are located on the back of the Monitor and are labelled for proper identification, see *Figure 3*.

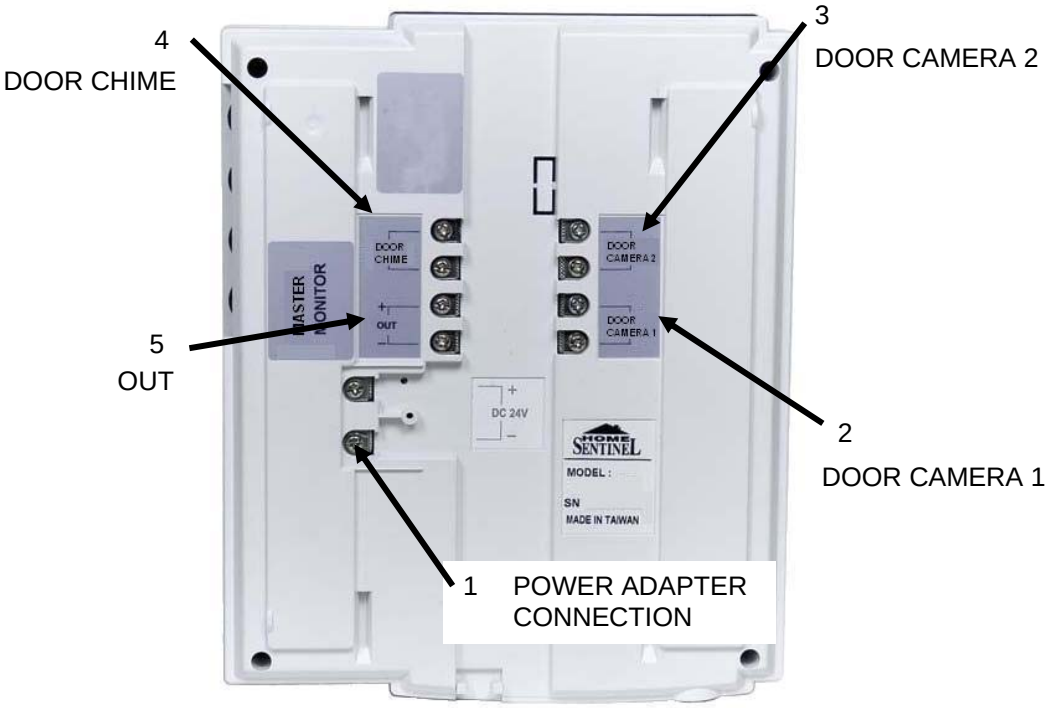

Figure 3: Monitor Terminal Connections

The Monitor Station connections are labelled: Power Adapter, Door Camera 1, Door Camera 2, Door Chime and Out, which are connected or used as follows:

1 Power Adapter Connection

(1) Remove the screw and the plastic cover

(2) Connect the 24V DC power adapter from the back of the monitor to a wall outlet. Use the supplied adapter.

NOTE The terminal connection at the monitor is a Y-terminal.

(3) Insert the +/- leads and screw them into the corresponding contacts (refer to the DC 24V illustration).

2 Door Camera 1

(1) Connect the 2 conductor 18 gauge wire (20 meter/65 feet) from the terminals marked, “Door Camera 1” on the monitor to the terminals on the outdoor camera unit, marked, “Monitor”. Alternatively, you can use your existing doorbell wiring (Please refer to *APPENDIX 2, page 29*, for more details regarding this option).

3 Door Camera 2

(1) Connect two wires from this terminal to an additional door camera. (Additional camera CA350 sold separately)

NOTE The connection between the camera and monitor has no polarity (the leads are interchangeable, with no +/-).

4 Door Chime

Used to connect to an alternate door chime (optional).The terminal will activate when the call button on the outdoor camera is pressed (active duration time about 3 seconds)

NOTE This terminal is N.O. (normally open) dry contact.

(1) Connect an existing or additional door chime to this terminal (optional).

5 Out

(1) Connect an additional slave monitor to the out terminal (additional monitor M0350 sold separately).

NOTE This terminal has a polarity. Make sure to connect the out terminal correctly.

3.3 The Doorphone Camera

The doorphone camera identifies and commnunicates with callers at the door.

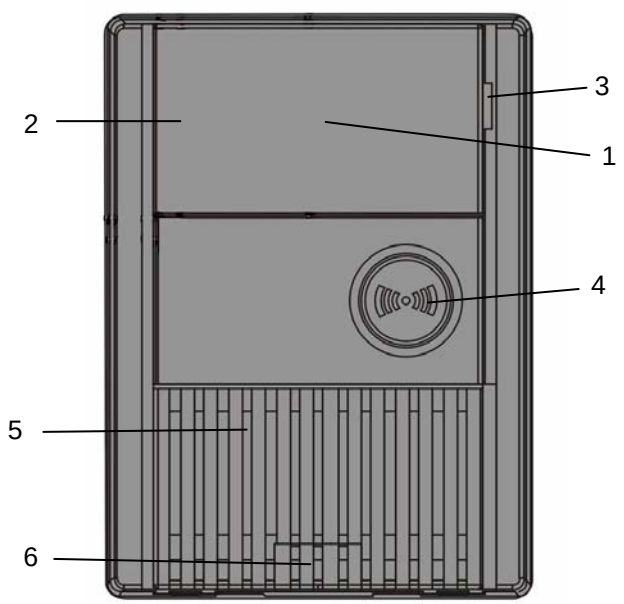

Figure 4: The Doorphone Camera

The following functional controls and B&W camera are located on your doorphone camera:

1 1/3” B/W CCD camera

A discreet high resolution black & white 1/3” CCD camera is located behind the tinted cover.

2 Infrared Emitters

Infrared Light Emitting Diodes (LED) will give you clear pictures at night at close range.

3 Microphone

Picks up sound around the camera.

4 Back-lit, Call button

Press this button to ring the doorbell chime and activate the monitor. The light around the call button will illuminate when the system has power.

5 Speaker

Emits sound from the monitor location.

6 Screw cover

This cover hides the screw that fastens the camera to the bracket.

3.4 Camera Terminal Connections

The Camera terminal connections are located on the back of the Camera and are labelled for proper identification, see *Figure 5*.

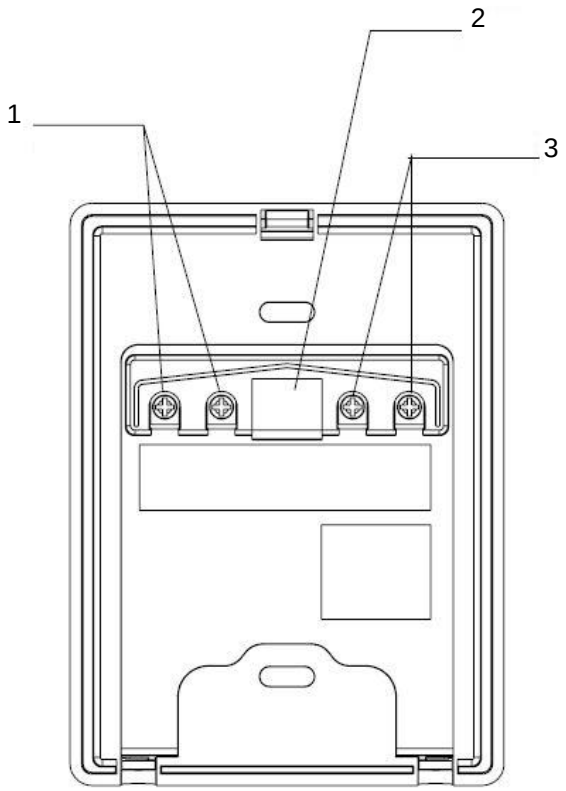

Figure 5: Camera Terminal Connections

The Camera terminal connections are labelled:Door Release, Door Release Switch and Monitor which are connected or used as follows:

1 Door Release

Connect this terminal to the Electric Door strike (optional).

NOTE For connecting an Electric Door strike see *APPENDIX #1, page 27.*

2 Door Release Switch

The switch sets a door release terminal output type (N.O. dry contact or 12V DC, 300 mA power output).

NOTE Please see *The Door Release Function, page 23* for further information on how to set this switch.

3 Monitor

Connect two wires from this terminal to the monitor's Door Camera 1 input.

4 Installation

This section describes the installation and setup of the video doorphone system. The system monitor and camera are installed and then connected before utilizing the functions.

IMPORTANT NOTE

Turn off the power to all units being used before connecting or disconnecting cables.

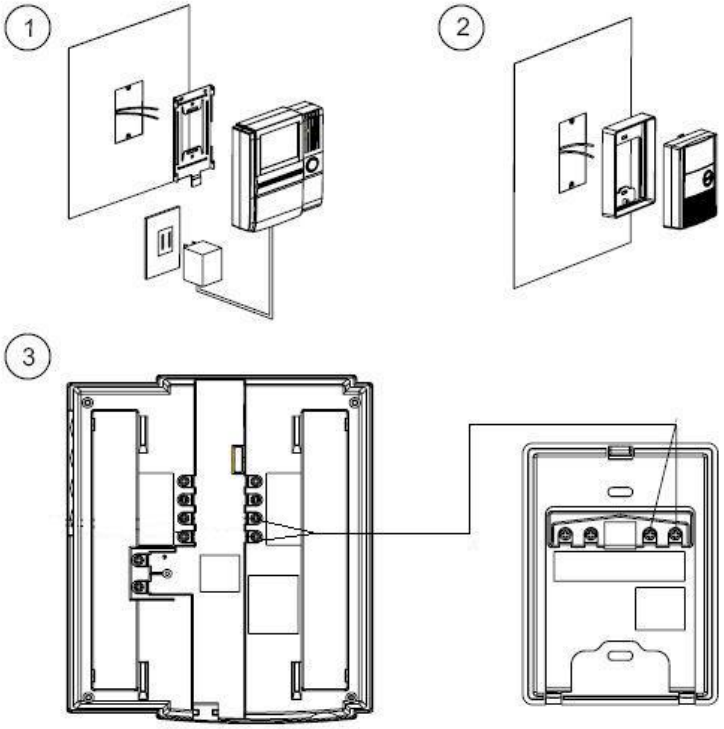

Figure 6: Install Monitor and Camera

Install the video doorphone monitor and camera:

1 Monitor Installation

(1) Choose a suitable location in your home.

(2) Fasten the wall mount plate on the wall. Use the provided hardware.

2 Camera Installation

(1) Fasten the wall mount bracket (for the camera beside your door) at a height of between 60” – 64” from the ground.

NOTE When the camera is installed the lens of the camera is situated at the eye level of the visitor

3 Connect the Camera to the Monitor

(1) Run the 20m/65ft cable from the camera unit to the monitor.

(2) Connect the two wires on the Monitor input marked “Door Camera”

NOTE It is a good idea to check all units together on a table/ bench prior to installing the units in their permanent locations. However, audio feedback may occur if the camera and monitor are set up beside each other.

4.1 Additional Door Camera Set-up

NOTE Additional CA350 camera is sold separately.

To enable a second camera:

(1) Press and hold the “Speakerphone (button #4) and Monitor- button **B1** per Figure 1 diagram” buttons at the same time while plugging in the power supply.

(2) The additional Door Camera will enable when the monitor produces a “Ding Dong” sound. Wait for 1.5 ~ 3 seconds for this “Ding Dong” sound.

NOTE To toggle the additional camera ON/OFF disconnect and reconnect the power supply while holding the “Speakerphone and Monitor” buttons at the same time for 1~3 seconds, each time.

4.2 Video Doorphone Operation

Operating the doorphone system consists of responding to visitor calls from the camera unit, monitoring audio and visuals, speaking to another monitor and remotely opening the door.

1 Visitor Calls From Camera Unit

- When the Call button on the camera is pressed, All monitors in the system will ring the doorbell chime and turn the screen ON.
- After the call, if the “Speak-out” or “Two-way” button is not pressed, it will cutoff after 30 seconds.
- If the “Speak-out” or “Two-way” button is pressed you have 90 seconds to communicate before it automatically cuts off, or press the “Cut off” button to terminate a call at any time.

2 Audio & Video Monitoring

- Press the Monitor button for monitoring a camera manually
- Press button again to switch the monitoring channel (If there is more than one camera connected)
- Press the “Cut off” button to end the monitoring mode

3 Intercom Function between Monitors

- Press the “Intercom” button from any monitor to generate a call signal at all monitor locations (i.e. expansion monitor)
- From another monitor respond to a call signal by pressing the “Two way” button. The calling monitor and responding monitor can then engage in the voice intercom function. The intercom LED will turn ON at all monitor locations to indicate the intercom function is engaged.

NOTE Only 2 monitors are allowed in this function.

Now 2 monitors can talk to each other, “hands-free”. This function will be terminated automatically after 90 sec, or when the “cut off” button is pressed, or when the calling button on the outdoor camera is pressed.

4 Door Release Function

- Pressing the “Door Open” button at the monitor (which must be online), will activate the door strike at the online camera. (Door strike EDS350 sold separately).
- The “Door Open” button at an offline monitor cannot activate this function.

5 Video Doorphone Expansion Options

The video doorphone system can be expanded to add another monitor (MO 350) and outdoor camera (CA 350), see *Figure 7*.

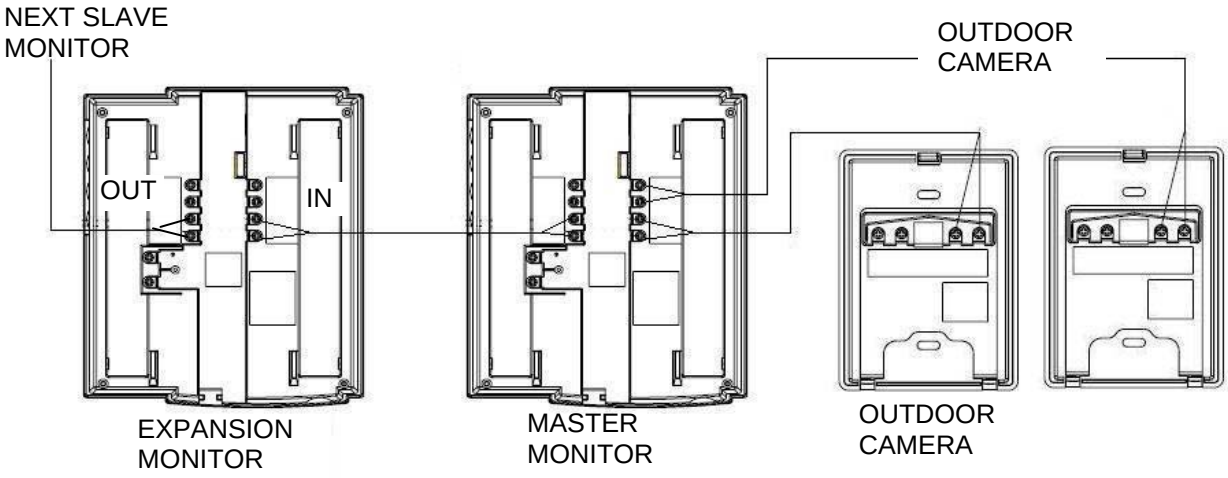

Figure 7: Expansion Options — Monitor and Outdoor Camera

5.1 The MO 350 Monitor

The MO 350 comprises functional buttons, controls and a B&W screen.

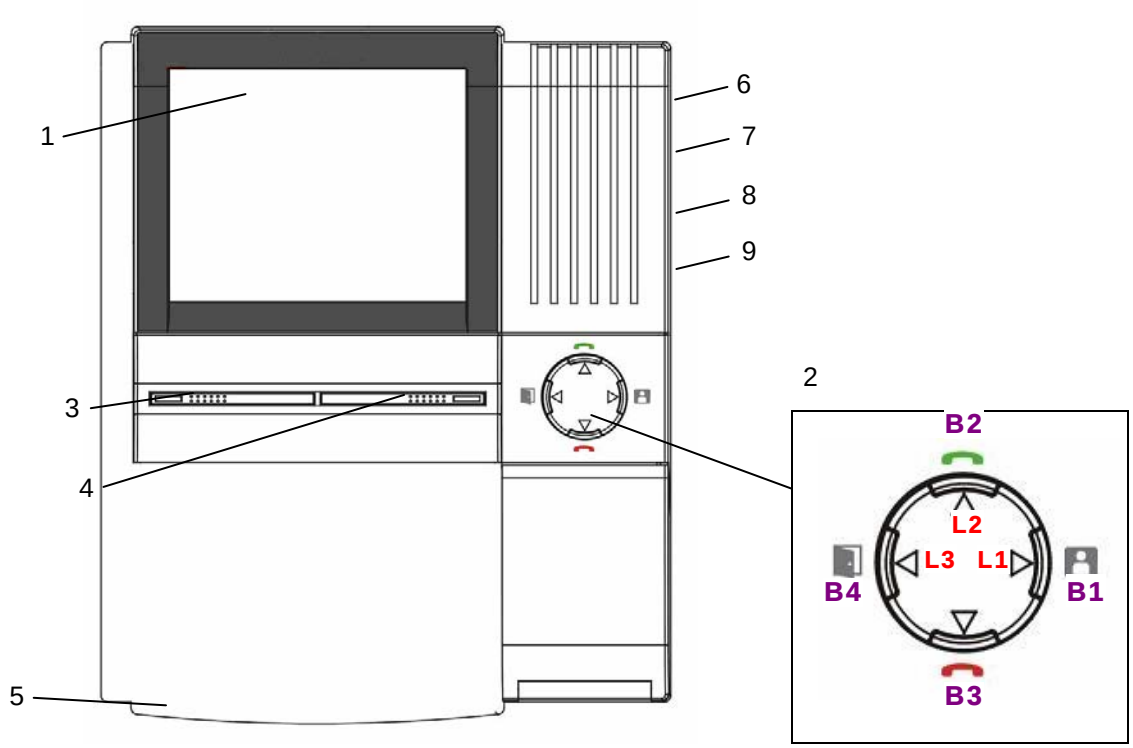

Figure 8: MO 350 Monitor Controls

The MO 350 Monitor Controls:

1 4” B/W flat type CRT screen: Displays image delivered from the door camera

2 Function button for “Monitor/ Intercom/ Door open and Cut off.”

	LED Light		Button Name	Press This Button To
L1	ON while the monitor displays video	**B1**	Monitor	Manually monitor camera locations (press multiple times to navigate between camera locations)
L2	ON while the intercom is activated	**B2**	Intercom	Call other monitoring station for intercom function between monitors (additional monitors required). Intercom time is 90 seconds before cut-off (10 sec if no response)
L3	ON while the system has power	**B4**	Door Open	Release door strike (open door – accessory door strike required). If the monitor is not online, this button has no effect
		B3	Cut Off	End function. If the monitor is not online this button has no effect

3 Speak-out button (one way): While this button is pressed, you can talk and the visitor can only listen in at the camera location

4 Speakerphone button (two way): When this button is pressed it allows for two way conversation between the monitor and the camera unit.

5 Microphone: Picks up sound around the monitor.

6 Brightness control: Allows you to control the brightness of the picture.

7 Sharpness control: Allows you to control the sharpness of the picture.

8 Bell volume control: Allows you to adjust the bell volume on the monitor.

9 Speakerphone volume control: Allows you to adjust the the volume for two way conversation.

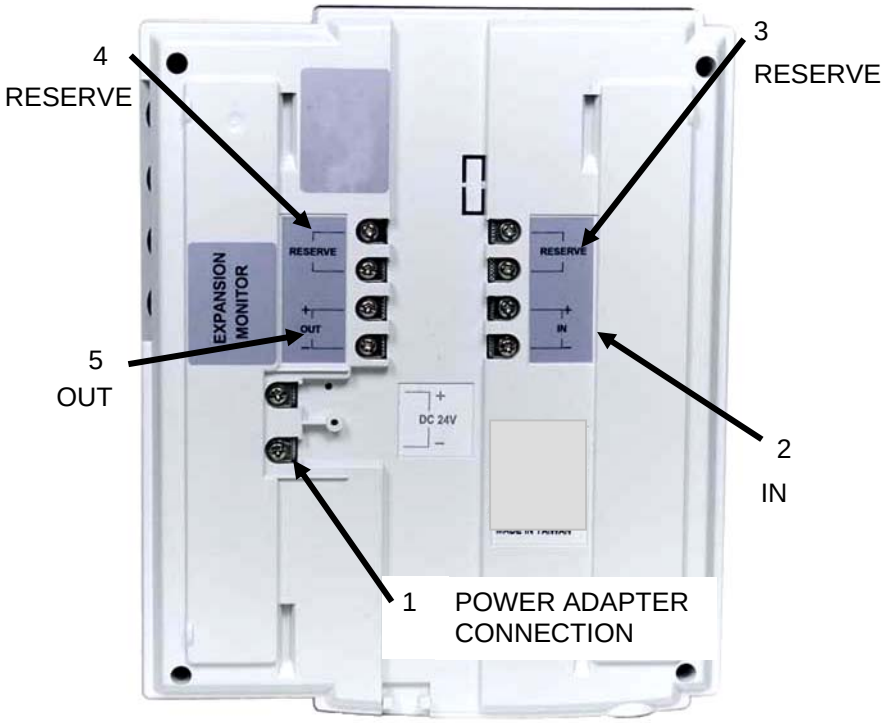

Figure 9: The MO 350 Terminal Connection

1 Power Adapter Connection: Remove the screw and the plastic cover to connect the 24V DC power adapter from the back of the monitor to a wall outlet using the supplied adapter. The terminal connection at the monitor is a Y-terminal, and the +/- leads need to be inserted and screwed into the corresponding contacts, *see Figure 9*.

2 IN+ /- : This terminal is used for connection to main/other slave monitor OUT+ / - terminal.

NOTE Make sure to connect IN + to OUT + and the IN - to OUT -. This terminal has a polarity.

3 OUT+ / - : This terminal is used for connection to other slave monitor “IN+ /-“ terminal.

NOTE Make sure to connect OUT + to IN + and the OUT - to IN -. This terminal has a polarity.

5.1.1 MO 350 Monitor Installation

1 Connect 2 wires IN+ and IN- on the back of the expansion monitor MO350 to the OUT+ and OUT- on the master monitor or other expansion monitor (MO 350)

NOTE When connecting multiple monitors, connect all monitors in series from the master monitor.

5.1.2 MO 350 Monitor Operation

1 Visitor Calls From Camera Unit

- Operates the same as the main monitor unit
- When the monitor LED is on it indicates the other monitor unit is on line to the camera unit
- When a visitor calls, you can answer from any monitor unit which will automatically cut-off all the other monitor stations.
- When the other monitor unit is online with the camera unit, you cannot access the system.

2 Audio & Video Monitoring

- Operates the same as the main monitor unit
- If other monitor is online, it cannot access the system.

3 Intercom between Monitoring Units

- Operates the same as the master monitor unit

4 Door Release Function

- Operates the same as the master monitor unit

5.2 The CA 350 Outdoor Camera

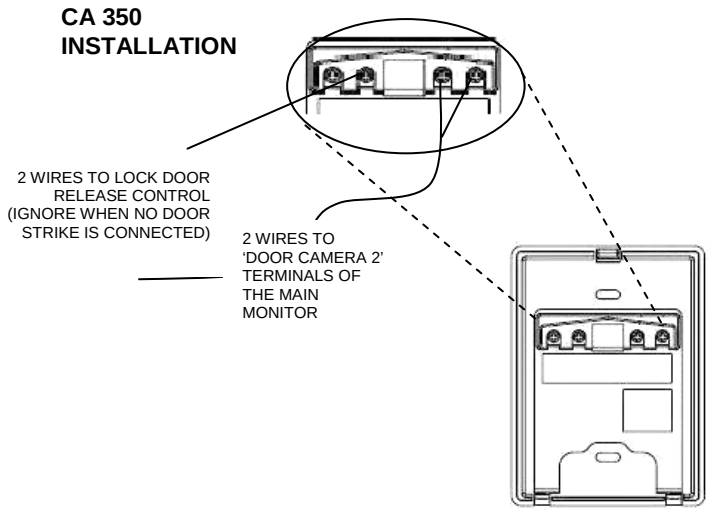

Figure 10: Connect CA 350 Outdoor Camera

5.2.1 CA 350 Outdoor Camera Installation

See Figure 7, page 18 for diagrams of the terminal connections.

1 Connect the two wires from the "Monitor" terminal on the camera to the 2 terminals on the main monitor, marked Door Camera 2.

2 Press and hold the "Speakerphone and Monitor" buttons (B1+4 from Figure 1 diagram) together at the main monitor for 1~3 seconds while plugging in the power supply. You will hear the "ding dong" sound from the monitor to confirm the addition door camera is set up.

5.2.2 CA 350 Outdoor Camera Operation

1 This CA 350 operates the same as the main camera unit.

5.2.3 The Door Release Function

The CA 350 Outdoor Camera includes selectable door release outputs, either a normally open (N.O.) dry contact or 12V DC, 300 mA using the switch setting.

NOTE For information on connecting an electric door strike (i.e. magnetic lock), see *APPENDIX #1, page 27.*

The DOOR RELEASE switch provides a normally open contact with no polarity allowing maximum by-pass current of DC 24V or AC 24V 1A

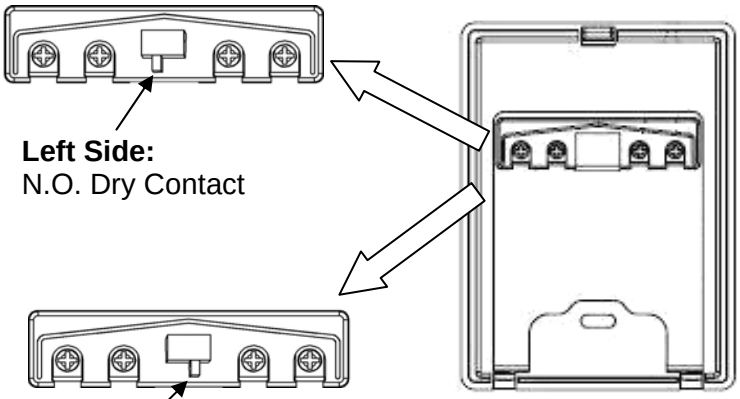

Left Side:
N.O. Dry Contact

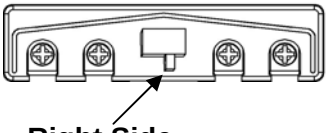

The DOOR RELEASE switch provide current output of maximum 12V DC 300 mA

Right Side:
12V DC 300mA

Figure 11: Switch Setting

6 Troubleshooting Guide

Before requesting service, check the troubleshooting guide to solve the problem.

Problem	Solution
No Power (no picture on monitor)	Make sure that the AC plug is firmly inserted into the AC outlet. Make sure that the DC Power is firmly connected to the monitor with correct polarity (+/-).
System is on, but no picture on the monitor	Make sure that the cable is firmly connected between the monitor and the camera. Adjust the brightness and sharpness controls clockwise
Sound is too low	Adjust the volume control clockwise
The picture is too dark or too white	Adjust the brightness and sharpness controls
Audio won't work correctly after adjusting the volume	The system may have been inadvertently set to Demo mode. Press and hold Speakerphone and Intercom buttons for 1~3 seconds while plugging in the power supply. Listen for noise to indicate toggling of the Normal/Demo modes.

NOTE Be sure to use the Power Adaptor supplied with the system.

7 Specifications

Monitor Unit	
Power Source:	Full range switching power Multi-Voltage 100 ~ 240Vac DC 23V, 0.75A
Power Consumption:	Active 15W, standby 3W
CRT Screen:	4" B/W Flat type
TV system:	B/W EIA
Resolution:	Over 380 TV Lines
Conversation Time:	90 seconds
Conversation System:	Hand Free Semi Duplex
Max. Wiring Distance (Terminal to Terminal):	60 M with AWG #20 wire 100 M with AWG #18 wire
Operating Temperature:	32°F ~ 104°F (0 ~ 40°C)
Dimensions:	6.69" (W) x 8.18" (H) x 2.13" (D)

Camera Unit	
Power Source:	supply from monitor
Resolution:	380 Lines
Image Sensor:	1/3" B/W CCD
TV System:	B/W EIA
Illumination:	Infrared LED
Min.Intensity of Illumination:	0 Lux (up to 3 feet from camera)
Operating Temperature:	-13°F ~ 122°F (-25°C ~ 50°C)
Lens:	3.7 mm F2.0, 90° diagonal viewing
Dimensions:	3.94" (W) x 5.24" (H) x 1.38" (D)

8 APPENDIX #1

8.1 Connect Electric Door Strike or Magnetic Lock (optional)

IMPORTANT NOTE

Before attempting to install the Electric Door Strike or Magnetic Lock please call a professional such as a locksmith or electrician to help with your installation.

1. N.O. Dry Contact Option

You can open the door remotely by pressing the Door Open button on the monitor to release an electric door strike or magnetic lock

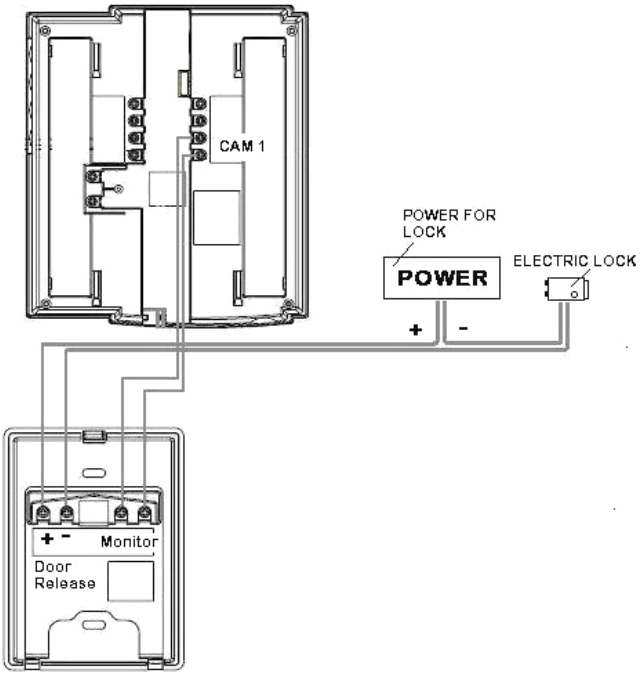

(1) Connect two wires (18 gauge) to the Outdoor Camera marked “Door Release” to the Electric Door Strike.

(2) One wire from the Outdoor Camera will connect to the positive terminal on the power supply.

(3) The other wire from the Outdoor Camera will connect to the positive terminal on the door strike unit.

(4) A third wire will connect from the negative terminal on the power supply to the negative terminal on the door strike unit.

IMPORTANT NOTE

You will need to install a power supply that is compatible with the eletronic door strike installed.

For example: if a 12V DC / 320 mA Electronic Door Strike is used, then a compatible power supply would be 12V DC / 500 mA (the power supply should have a higher current rating than the door strike so that it could handle the requirement

CAUTION

Potential for damage to the unit

Do not overload the current on the lock.

Current overload may cause damage on the monitor and door strike unit

2. 12V DC 300 mA Power Option

Connect two wires (18 gauge) between the camera terminal marked “Door Release” and the Electronic Door strike, see *Figure 12.*

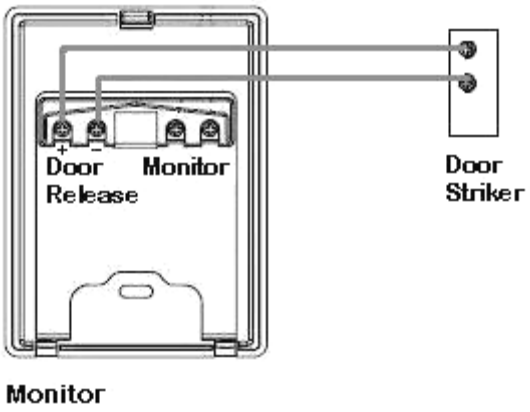

Figure 12: 12V DC 300 mA Power Option

NOTE When using the 12V DC 300 mA power option, make sure that the Electric Door strike used is rated for 12V DC and the current rating less than 300mA.

9 APPENDIX 2

9.1 Connect the Video Doorphone System with Existing Wiring

Although there are many different styles of doorbell systems on the market, they mainly consist of the same 3 main components and are installed in the same way.

These are the 3 main components in a typical doorbell system: Doorbell (a visitor at the door presses it), Transformer (or power –it is attached to the house circuit and provides a voltage output of approximately 6 to 24 volts) and Doorchime (it rings when the doorbell is pressed).

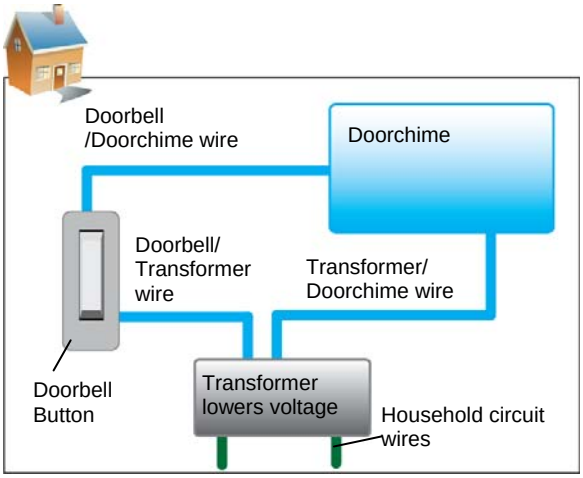

Figure 13: Household Wiring for a Typical Doorbell

The following basic instructions explains how to install the Video Doorphone System using your existing doorbell wiring.

<u>IMPORTANT NOTE</u>

Turn off the breaker that supplies power to the doorbell before attempting to install the doorphone system. Please call a professional such as a locksmith or electrician to help with your installation.

Step 1. Remove the Doorbell Wires from the House Circuit

NOTE Typically Doorbells use "transformers" to convert the current in your house to low voltage current (i.e. approximately 6 to 24 volts). The transformer is attached to the house circuit and provides power to the Doorbell.

2. Disconnect the Doorbell/ Transformer wire (wire attached to the Transformer which leads from the Doorbell, see *Household Wiring for a Typical Doorbell*).

3. Disconnect the Transformer/ Doorchime wire (wire attached to the Transformer that leads from the Door Chime, see *Household Wiring for a Typical Doorbell*).

4. Join the two disconnected wires (Doorbell/ Transformer wire and Transformer/ Doorchime wire) with wire connectors.

Step 2. Remove the Doorbell and Connect the Door Camera

1. Uninstall the Doorbell cover.

2. Disconnect the wires from the Doorbell's terminal screws.

3 Remove the Doorbell.

4. Connect the existing Doorbell wires to the terminals marked Monitor at the back of the Door Camera.

5. Mount the Doorphone Camera (refer to the *Installation* chapter for instructions).

NOTE The Doorphone Camera should be located at visitor height for viewing.

Step 3. Remove the Door Chime and Connect the Monitor

1. Uninstall the Door Chime cover.

2. Disconnect the wires from the Door Chime's terminal screws.

3 Remove the Door Chime.

4. Connect the existing doorbell wires to the terminals marked CAM1 at the back of the Monitor.

NOTE If the existing wires are not long enough for you to locate the Monitor then you must extend the wires to the location of the Monitor.

5. Mount the Monitor (refer to *Installation* chapter for instructions).

It’s all on the web

- Product Information
- Specification Sheets
- User Manuals
- Software Upgrades
- Quick Start Guides
- Firmware Upgrades

VISIT

www.homesentinel.com