LOREX® VIEW YOUR WORLD™ SECURITY CAMERA

A WIDE ANGLE PERSPECTIVE

VIEW YOUR WORLD - IN HIGH RESOLUTION.

- CLEAR-NIGHT IMAGING TECHNOLOGY
- WIDE ANGLE VIEWING
- WEATHERPROOF DESIGN

SEE IN HIGH RESOLUTION

See more, see better, with a wide-angle lens and high resolution image sensor.

VIEW WITH CLARITY

ClearNight imaging technology with Digital Noise Reduction delivers a high-quality night-time image with a viewing distance up to 80ft.

FLEXIBLE INSTALLATION

Intstall the camera indoors or outdoors to walls, ceilings, or other flat surfaces.

FEATURES

- High Resolution image sensor produces 540 TV lines of resolution
- ClearNight with Advanced Digital Noise Reduction improves image quality and recording storage efficiency
- Capable of viewing images up to 80ft (24m)1 away in total darkness with IR night vision
- 3.6mm wide angle lens ideal for most common surveillance applications
- IP67 rated housing for indoor / outdoor installations2

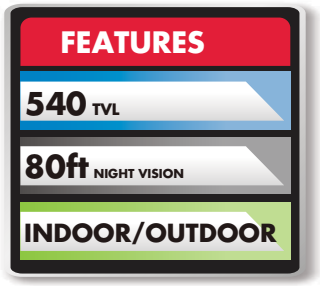

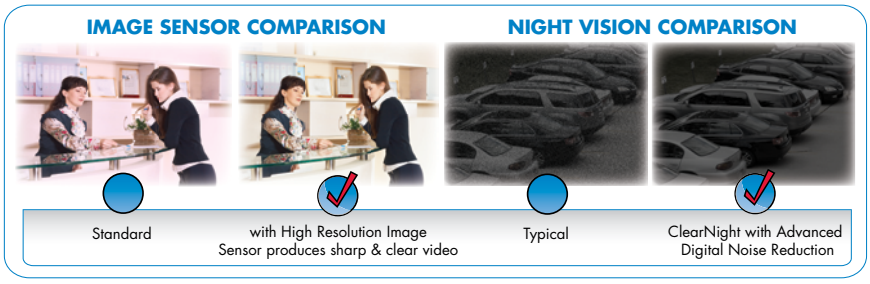

VANTAGE

CVC6985U

www.lorextechnology.com

LOREX® VIEW YOUR WORLD™ SECURITY CAMERA

PRODUCT INFORMATION

CVC6985U	7-78597-06985-3
Package Weight:	0.33kg / 0.73lbs
Package Dimensions: (W x D x H)	299mm (w) x 197mm (h) x 131mm (d) 11.8" (w) x 7.8" (h) x 5.2" (d)
Package Cube:	0.0077 CBM / 0.272 CBF
Contents:	1x Camera, 1x Sunshade, 1x 66ft BNC / Power extension cable 1x BNC female / RCA male adapter, 1x Wall-mount bracket, 1x 12V DC power adapter

DIMENSIONS

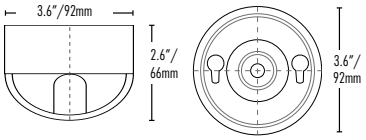

DISCLAIMERS

1 IR illumination range under ideal conditions. Objects at or beyond this range may be partially or completely obscured, depending on the camera application.
2 Not recommended for submersion in water. Installation in a sheltered location recommended.

SPECIFICATIONS

Image Sensor:	Ultra High Resolution 1/3" Color Image Sensor
Video Format:	NTSC
Effective Pixels:	H: 768, V: 494
Resolution:	540 TV Line
Scan System:	2:1 Interlace
Sync System:	Internal
S/N Ratio:	More than 48dB
Iris:	AES
AES Shutter Speed:	1/60~1/100,000 Sec
Mini Illumination:	0.1 Lux without IR LED, 0 Lux with IR LED
Video Output:	Composite 1.0Vpp @ 75 ohm
Lens/Lens Mount:	3.6mm F 2.0/ Fixed
FOV (Diagonal):	79 degree
Termination:	BNC Type
IR LED/ Night Vision Range:	35 pieces / 850 nm / 80ft/25m
Power Requirement:	12V DC
Power Consumption:	400 mA max
Operating Temp Range:	-10° ~ 50° C / 14° ~ 122° F
Environmental Rating:	IP 67

INSTALLATION DIAGRAM

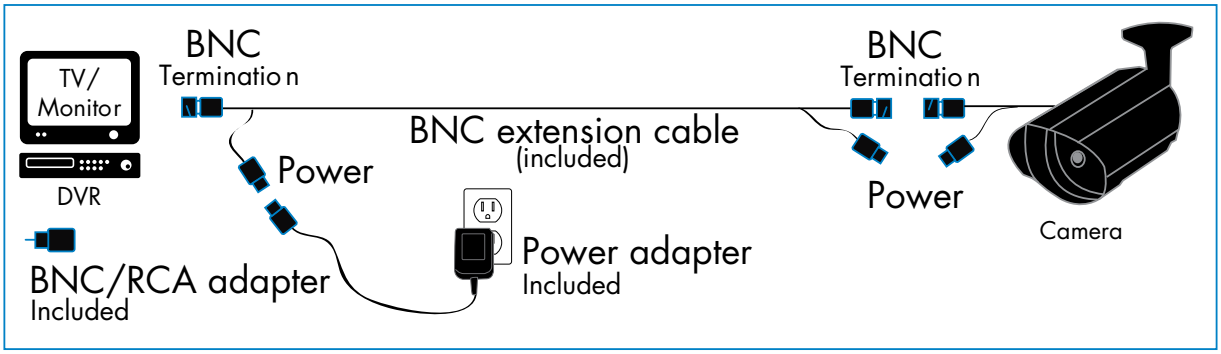

VANTAGE

CVC6985U

www.lorextechnology.com

Lorex Technology Inc.

250 Royal Crest Court, Markham,
Ontario L3R 3S1
Canada.

3700 Koppers Street
Baltimore, Maryland 21227,
USA.

©2011 Lorex Technology Inc.
As our product is subject to continuous improvement, Lorex Technology & subsidiaries reserve the right to modify product design, specifications & prices without notice and without incurring any obligation. E&OE.

3-22062011