LOREX SECURITY CAMERA

SEE IT ALL - IN GREATER DETAIL

Keep an eye on your home or business day or night with this high-resolution security camera.

FEATURES:

- 1.3 Megapixel image sensor (900 TVL resolution)
- Lightweight yet extremely durable Polycarbonate housing
- Integrated automatic Infrared Cut Filter (ICR) ensures accurate color representation in all lighting conditions
- Day/Night mode: Picture automatically switches to B&W delivering better clarity in low light conditions
- BrightNight viewing with enhanced low light image sensor
- Close-up recognition at night with auto light compensation prevents wash-out effect
- Night vision range up to 130ft (40m) in ambient lighting & up to 90ft (28m) away in total darkness [1]
- Modern two-tone design - residential and business friendly
- Split glass design minimizes IR reflection
- Anti-glare feature ensures clear images under strong lighting conditions
- 3.6mm wide-angle lens captures a wide field of view
- Vandal resistant design with cable pass-through bracket
- Ideal for outdoor & indoor applications (IP66 Rated) [2]
- Removable camera base and integrated 3ft camera cable for hassle-free and flexible installation
- Versatile mounting options: ceiling, counter or wall mountable
- 60ft BNC/Power extension cable included per camera
- Energy-efficient CEC (California Energy Commission) compliant power adapter included

POLYCARBONATE PROTECTED

130/90 FT Night Vision | 900 TVL Resolution | IP66

LOREX® SECURITY CAMERA

Product Information

CVC7721PK4B	6-95529-00054-1
Package Weight:	3.1 kg / 7.0 lbs
Package Dimensions: (W x D x H)	464mm x 337mm x 88mm/18.3" x 13.3" x 3.5"
Package Cube:	0.013 CBM / 0.49 CBF
Contents:	4 x Cameras, 4 x Mounting kit with Allen key, 4 x 60ft BNC / power extension cable, 1 x 4-in-1 Power adapter

Dimensions

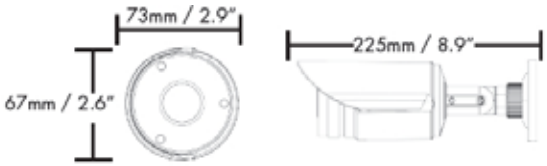

Disclaimers

1. Stated IR illumination range is based on ideal conditions in typical outdoor night time ambient lighting and in total darkness. Actual range and image clarity depends on installation location, viewing area and light reflection / absorption level of object.

2. Not intended for submersion in water. Installation in a sheltered location recommended.

Installation Diagram

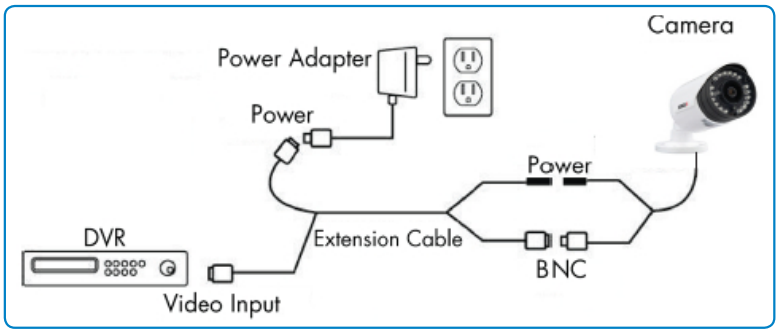

Specifications

Image Sensor	1/3" 1.3 MP Sony Exmor® CMOS
Video Format	NTSC
Effective Pixels	H: 1305 V: 1049
Resolution	900 TVL
Scan System	2:1 Interlace
Sync System	Internal
S / N Ratio	48dB (AGC Off)
Iris	AES
AES Shutter Speed	1/60 ~ 1/100,000 sec.
Min. Illumination	0.01 Lux without IR LED 0 Lux with IR LED
Video Output	Composite 1.0Vpp @ 75ohm
Lens / Lens Type	3.6mm F2.0 / Fixed
FOV (Diagonal)	92°
Termination	BNC Type
IR LED Qty. / Type	24 pieces / 850nm
Night Vision Range	130ft (40m) / 90ft (28m)
Power Requirement	12V DC ±10%
Power Consumption	Max. 320mA (w / IR)
Operating Temp. Range	-4° ~ 122°F / -20° ~ 50°C
Operating Humidity Range	< 80% RH
Environmental Rating	IP66
Weight (including stand)	0.6lbs / 0.2kg

Lorex Corporation www.lorextechnology.com

250 Royal Crest Court
Markham, Ontario,
Canada L3R 3S1

901 Elkridge Landing Road, Suite 100
Linthicum, Maryland 21090,
USA.

© 2014 Lorex Corporation

As our product is subject to continuous improvement, Lorex Corporation & subsidiaries reserve the right to modify product design, specifications & prices without notice and without incurring any obligation. E&OE.

1-03112014