HIGH DEFINITION 4MP BULLET SECURITY CAMERA

HIGH DEFINITION PEACE OF MIND

Record outstanding 4MP HD video for double the detail of 1080p. Advanced Color Night Vision™ and True HDR technology ensure clear identification in the most challenging lighting conditions, indoors and outdoors. Convenient one cable installation provides power to the camera and carries HD video to the recorder.

FEATURES:

- High definition 4MP image sensor delivers double the detail of 1080p [1]
- 4MP video recording provides HD quality even when zoomed, offering clearer identification in video evidence
- Color Night Vision™ delivers full color nighttime video for improved recognition of objects in low light conditions [2]
- IR night vision range up to 130ft (40m) in ambient lighting and 90ft (27m) in total darkness [3]
- ClearNight imaging for improved low light performance and improved recording efficiency
- True High Dynamic Range (HDR) improves image clarity in high-contrast lighting, revealing details in extremely bright and dark areas of the image
- Intelligent compression saves recording space by optimizing video performance based on available bandwidth
- Wide angle 83˚ field of view (horizontal)
- Ceiling / wall mountable
- Simple camera installation using a single CAT5e cable with Power over Ethernet (PoE)
- 60ft (18m) UL-compliant cable suitable for surface and in-wall installation
- Extend the camera's video and power with a single Ethernet cable up to 300ft (91m) from the recorder
- Single-screw bracket adjustment for faster installation
- Cold climate capability (-22˚F / -30˚C)
- Weatherproof metal housing for outdoor & indoor installation (IP66 Rated) [4]

4MP **High Definition** | 83˚ **Field of View** | 130/90 FT 40/27 M **Night Vision** | Indoor/outdoor

HIGH DEFINITION 4MP BULLET SECURITY CAMERA

Product Information

Model	LNB4163B
Configuration	4MP HD IP Bullet Camera (NTSC)
Package	Brown Box
Package Dimensions (W × D × H)	16.0 × 4.6 × 4.6" 406 × 117 × 117mm
Package Weight	2.3lbs / 1.0kg
Package Cube	0.2cbf / 0.005cbm
UPC	6-95529-00646-8
Contents	1× 4MP HD IP Bullet Camera, 1× 60ft (18m) UL-Compliant CAT5e Ethernet Cable, 1× Mouting Kit, Quick Setup Guides

Model	LNB4163BP
Configuration	4MP HD IP Bullet Camera (PAL)
Package	Brown Box
Package Dimensions (W × D × H)	16.0 × 4.6 × 4.6" 406 × 117 × 117mm
Package Weight	2.3lbs / 1.0kg
Package Cube	0.2cbf / 0.005cbm
UPC	6-95529-00643-7
Contents	1× 4MP HD IP Bullet Camera, 1× 60ft (18m) UL-Compliant CAT5e Ethernet Cable, 1× Mounting Kit, Quick Setup Guides

Disclaimers

1. Compatible with all Lorex HD NVRs except for LNR100 / LNR200 / LNR300 Series. For the most up-to-date list of compatible recorders, visit www.lorextechnology.com/support
2. Full color nighttime video typically switches to black & white IR night vision below 1 lux to ensure optimal low-light image quality.
3. Stated IR illumination range is based on ideal conditions in typical outdoor night time ambient lighting and in total darkness. Actual range and image clarity depends on installation location, viewing area, and light reflection / absorption level of object. In low light, the camera will switch to black and white.
4. Not intended for submersion in water. Installation in a sheltered location recommended.

Dimensions

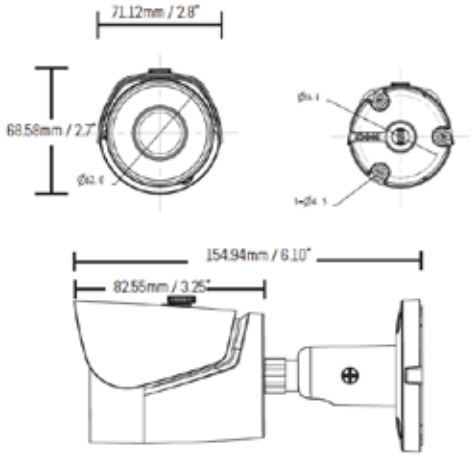

Specifications

Image Sensor	1/3" 4MP [1]
Video Format	NTSC / PAL
Effective Pixels	H: 2688 × V: 1520
Resolution	4MP (2688×1520) @ 20fps
Scan System	Progressive
Sync System	Internal
S/N Ratio	≥42dB (AGC OFF)
Iris	EIS
AES Shutter Speed	1/3 (1/4) ~ 1/100,000 seconds
Min. Illumination	0.38 lux without IR 0.28 lux with IR
Video Output	IP
Lens / Lens Type	3.6mm F2.0 / Fixed
Field of View (Horizontal)	83°
Termination	RJ45 Ethernet / 12V DC Power Barrel (optional)
IR LED Type	850nm
Night Vision Range	130ft (40m) / 90ft (27m) [3]
Color Night Vision™	Yes
Power Requirement	PoE (Power over Ethernet) Class 3 / 12V DC
Power Consumption	Max. 265mA / 3.2W
Operating Temp. Range	-22° ~ 140°F / -30° ~ 60°C
Operating Humidity Range	<95% RH
Environmental Rating	IP66 (Indoor / Outdoor) [4]
Weight	0.9lbs / 0.4kg

Installation Diagram

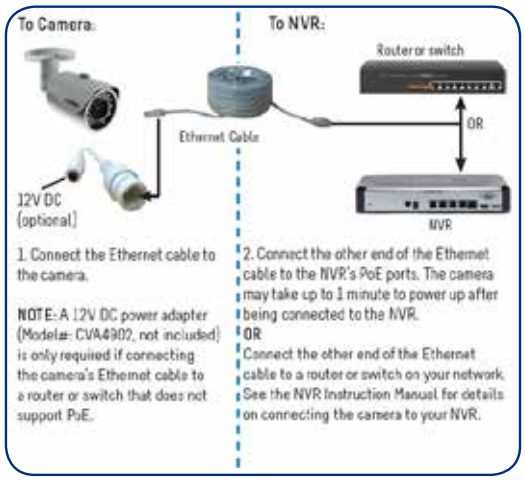

Lorex Corporation, a division of FLIR Commercial Systems Inc.

250 Royal Crest Court
Markham, Ontario,
Canada L3R 3S1

7055 Troy Hill Drive
Elkridge, Maryland
21075 USA

www.lorextechnology.com

© 2016 Lorex Corporation

As our product is subject to continuous improvement, Lorex Corporation & subsidiaries reserve the right to modify product design, specifications & prices without notice and without incurring any obligation. E&OE.

2-06232016