HIGH DEFINITION 3MP DOME SECURITY CAMERA

HIGH DEFINITION PEACE OF MIND

Record 3MP HD video for picture quality boasting 50% more detail than 1080p. Keep an eye on your home or business with this weatherproof, cold climate capable camera. Convenient one cable installation provides power to the camera and carries HD video to the recorder.

FEATURES:

- High definition 3MP image sensor delivers 50% more detail than 1080p [1]
- Infrared cut filter ensures accurate color representation
- Night vision range up to 115ft (35m) in ambient lighting and 75ft (23m) in total darkness [2]
- Day/Night mode: picture automatically switches to B&W delivering better clarity in low light conditions
- ClearNight imaging for improved low light performance and improved recording efficiency
- 75˚ field of view (horizontal)
- Ceiling / wall mountable
- Simple camera installation using a single CAT5e cable with Power over Ethernet (PoE)
- 60ft (18m) UL-compliant cable suitable for surface and in-wall installation
- Extend the camera's video and power with a single Ethernet cable up to 300ft (91m) from the recorder
- Cold climate capability (-22˚F / -30˚C)
- Weatherproof for outdoor & indoor installation (IP66 Rated) [3]

3MP High Definition	75˚ Field of View	115/75 FT 35/23 M Night Vision	Indoor/outdoor

HIGH DEFINITION 3MP DOME SECURITY CAMERA

Product Information

Model	LNE3162B
Configuration	3MP HD IP Dome Camera (NTSC)
Package	Brown Box
Package Dimensions (W × D × H)	11.7 × 5.4 × 4.5" 297 × 137 × 114mm
Package Weight	2.3lbs / 1.0kg
Package Cube	0.2cbf / 0.005cbm
UPC	6-95529-00620-8
Contents	1× 3MP HD IP Dome Camera, 1× 60ft (18m) UL-Compliant CAT5e Ethernet Cable, 1× Mouting Kit, Quick Setup Guides

Model	LNE3162BP
Configuration	3MP HD IP Dome Camera (PAL)
Package	Brown Box
Package Dimensions (W × D × H)	11.7 × 5.4 × 4.5" 297 × 137 × 114mm
Package Weight	2.3lbs / 1.0kg
Package Cube	0.2cbf / 0.005cbm
UPC	6-95529-00641-3
Contents	1× 3MP HD IP Dome Camera, 1× 60ft (18m) UL-Compliant CAT5e Ethernet Cable, 1× Mouting Kit, Quick Setup Guides

Specifications

Image Sensor	1/3" 3MP [1]
Video Format	NTSC / PAL
Effective Pixels	H: 2304 × V: 1536
Resolution	3MP (2048×1536) @ 25fps
Scan System	Progressive
Sync System	Internal
S/N Ratio	≥56dB (AGC OFF)
Iris	EIS
AES Shutter Speed	1/3 (1/4) ~ 1/100,000 seconds
Min. Illumination	0.7 lux without IR 0.4 lux with IR
Video Output	IP
Lens / Lens Type	2.8mm F2.0 / Fixed
Field of View (Horizontal)	75˚
Termination	RJ45 Ethernet / 12V DC Power Barrel (optional)
IR LED Type	850nm
Night Vision Range	115ft (35m) / 75ft (23m) [2]
Power Requirement	PoE (Power over Ethernet) Class 3 / 12V DC
Power Consumption	Max. 230mA / 2.8W
Operating Temp. Range	-22˚ ~ 140˚F / -30˚ ~ 60˚C
Operating Humidity Range	<95% RH
Environmental Rating	IP66 (Indoor / Outdoor) [3]
Weight	0.8lbs / 0.4kg

Disclaimers

1. Compatible with all Lorex HD NVRs except for LNR100 / LNR200 / LNR300 Series. For the most up-to-date list of compatible recorders, visit www.lorextechnology.com/support
2. Stated IR illumination range is based on ideal conditions in typical outdoor night time ambient lighting and in total darkness. Actual range and image clarity depends on installation location, viewing area, and light reflection / absorption level of object. In low light, the camera will switch to black and white.
3. Not intended for submersion in water. Installation in a sheltered location recommended.

Installation Diagram

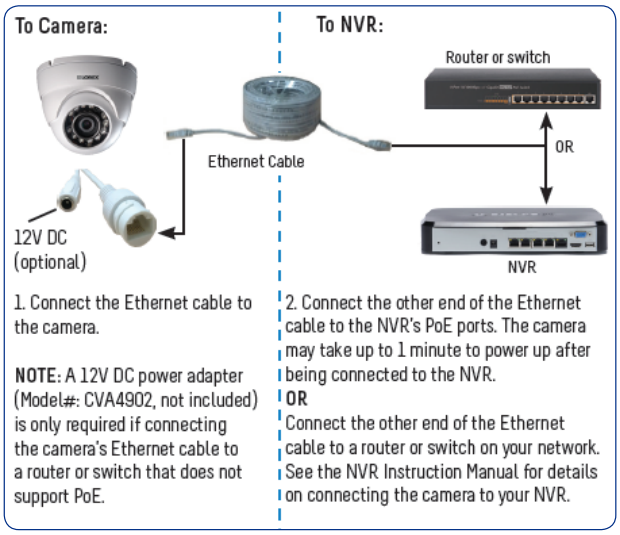

Dimensions

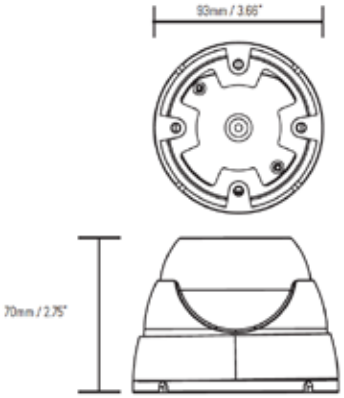

Lorex Corporation, a division of FLIR Commercial Systems Inc.

250 Royal Crest Court
Markham, Ontario,
Canada L3R 3S1

7055 Troy Hill Drive
Elkridge, Maryland
21075 USA

www.lorextechnology.com

© 2016 Lorex Corporation

As our product is subject to continuous improvement, Lorex Corporation & subsidiaries reserve the right to modify product design, specifications & prices without notice and without incurring any obligation. E&OE.

2-03082016