Instruction Manual

LZV1722 HD PTZ Camera

Instruction Manual
LZV1722 HD PTZ Camera

Thank you for purchasing this product. Lorex is committed to providing our customers with a high quality, reliable security solution.

This manual refers to the following models:

LVZ1722

For the latest online manual, downloads and product updates, and to learn about our complete line of accessory products, please visit our website at:

www.lorextechnology.com

WARNING

RISK OF ELECTRIC SHOCK
DO NOT OPEN

WARNING: TO REDUCE THE RICK OF ELECTRIC SHOCK DO NOT REMOVE COVER. NO USER SERVICABLE PARTS INSIDE.

REFER SERVICING TO QUALIFIED SERVICE PERSONNEL.

The lightning flash with arrowhead symbol, within an equilateral triangle, is intended to alert the user to the presence of uninsulated "dangerous voltage" within the product's enclosure that may be of sufficient magnitude to constitute a risk of electric shock.

The exclamation point within an equilateral triangle is intended to alert the user to the presence of important operating and maintenance (servicing) instructions in the literature accompanying the appliance.

WARNING: TO PREVENT FIRE OR SHOCK HAZARD, DO NOT EXPOSE THIS UNIT TO RAIN OR MOISTURE.

CAUTION: TO PREVENT ELECTRIC SHOCK, MATCH WIDE BLADE OF THE PLUG TO THE WIDE SLOT AND FULLY INSERT.

Table of contents

1 Safety Instructions 1

2 LZV1722 Features 2

3 Getting Started 3

4 Connecting the Camera 4

5 Installation 5

5.1 Installation Tips and Warnings 5

5.2 Extension Cables 5

5.2.1 Connection Diagram for Extending the Cables Beyond 100ft (30m) 6

5.3 Installation (Indoor/Outdoor) 6

6 Controlling the PTZ Camera with your DVR 15

6.1 Controlling a PTZ Camera (Local DVR) 15

6.2 Advanced PTZ Controls 16

6.2.1 Presets 17

6.2.2 Tours 18

6.2.3 Pattern 19

6.2.4 Auto Scan 19

7 Technical Specifications 21

7.1 Dimensions 22

8 Troubleshooting 23

1 Safety Instructions

- Read this guide carefully and keep it for future reference.
- Follow all instructions for safe use of the product and handle with care.
- Use the camera within given temperature, humidity, and voltage levels noted in the Technical Specifications.
- Camera is rated for outdoor use and is weatherproof when properly installed. Camera is not intended for submersion in water. Installation under a sheltered environment is recommended.
- Do not disassemble the camera.
- Do not point the camera directly towards the sun or a source of intense light.
- Use only the supplied regulated power supply. Use of a non-regulated, non-conforming power supply can damage this product and voids the warranty.
- Make sure to install the camera in a location that can support the camera weight. If mounting the camera on a drywall surface, you must drill at least 2 of the mounting screws through a wooden stud. See 5.3 *Installation (Indoor/Outdoor)*, page 6 for complete installation instructions.
- Make sure there are no live electrical cables in the area where you plan to mount the camera.
- Periodic cleaning may be required. Use a damp cloth only. Do not use anything other than water to clean the dome cover, as chemicals such as acetone can permanently damage the plastic.

2 LZV1722 Features

- High definition 720p 1.3 MP Sony Exmor® image sensor.[1]
- Powerful 12x optical zoom and 16x digital zoom to focus in on even the finest details.
- Full 360° continuous pan rotation for complete area coverage. Fast 300° per second panning speed.
- Zoom lens for viewing small or distant objects with enhanced definition.
- Control PTZ camera movement and transmit video over a single coaxial cable.
- Program preset viewing points, patterns, scan cycles and tours when connected to a DVR.
- Remote control of the PTZ camera using a smartphone or tablet when connected to a DVR.
- Day/Night mode: picture automatically switches to B&W delivering better clarity in low light conditions.
- ClearNight imaging for superior low light performance.[2]
- Infrared cut filter ensures accurate color representation.
- High definition video with outstanding detail, day or night.
- Weatherproof for outdoor & indoor installation (IP66 Rated).[3]
- Wall mount & 100ft extension cable included for installation flexibility.

Note

1. Compatible with Lorex LHV1000 Series only.
2. This camera features an ultra-low light sensitive image sensor and therefore does not feature Infra-Red LEDs. The camera requires ambient lighting (for example, street/building lighting, star or moon light) to render a night time image. In total darkness (zero Lux), the camera will not produce a night time image and therefore the camera should not be installed in completely dark areas.
3. Not intended for submersion in water. Installation in a sheltered location recommended.

3 Getting Started

The system comes with the following components:

PTZ Camera

Wall Mount

Pendant Cap

100ft BNC / Power Extension Cable

4x Mounting Screws & Anchors

Power Adapter

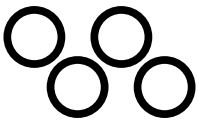

4x O-Rings

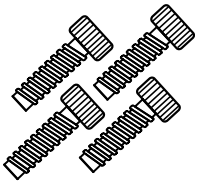

4x Allen Bolts

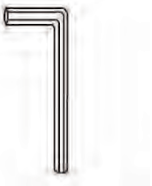

Allen Key

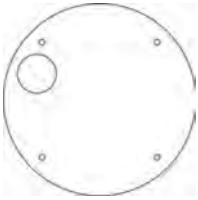

Mounting Template

Instruction Manual

4 Connecting the Camera

Note

- It is recommended to connect the camera to your DVR and test the PTZ controls before permanent installation. For instructions on how to setup PTZ controls, see 6 *Controlling the PTZ Camera with your DVR*, page 15.
- When you first power up the camera and connect it to the DVR, it may take up to 2 minutes for the camera image to appear.
- The video signal can be extended up to 800ft (244m) with a single cable run. See 5.2 *Extension Cables*, page 5 for details.

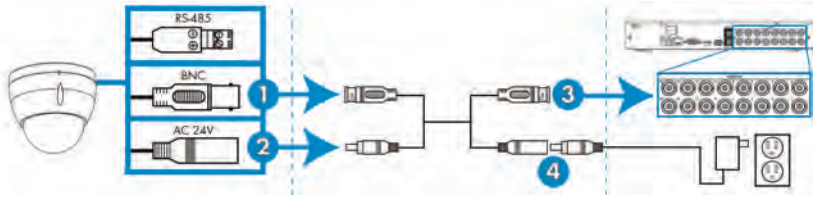

1. Connect the BNC video connector on the camera cable to the included extension cable.
2. Connect the female AC 24V power connector on the camera cable to the male power connector on the included extension cable.
3. Connect the BNC cable on the extension cable to one of the **Video Input** ports on the DVR. Make note of the port number where you connect the camera, as it will be used when configuring the DVR to communicate with the camera.
4. Connect the power connector on the extension cable to the included power adapter. Plug the power adapter into a power outlet.

CAUTION

- Make sure to disconnect the power adapter before installing the camera. The camera will begin moving immediately when the power adapter is connected.
- Make sure to remove the foam ring inside the camera housing before powering the camera on for the first time. See 5.3 *Installation (Indoor/Outdoor)*, page 6 for details.

5 Installation

5.1 Installation Tips and Warnings

WARNING

Make sure to install the camera in a location that can support the camera weight. If mounting the camera on a drywall surface, you must drill at least 2 of the mounting screws through a wooden stud. See 5.3 *Installation (Indoor/Outdoor)*, page 6 for complete installation instructions.

- Camera is rated for outdoor use. It is recommended to install the camera in a sheltered area, such as under the eaves on a roof.
- It is recommended to install the camera as high up as possible to get the best possible image.
- Camera is capable of seeing in low light conditions (0.1 Lux), but it cannot see in total darkness. It is recommended to install the camera where there is some ambient light (for example, street lighting or starlight, moonlight, etc.) or leave some lighting on in the area where the camera is installed.
- To extend the length of the cable, see 5.2 *Extension Cables*, page 5.
- Mount the camera where the lens is away from direct and intense sunlight.
- Plan your cable wiring so that it does not interfere with power lines or telephone lines.
- Ensure you adhere to local building codes.
- Ensure that the camera wiring is not exposed or easily cut.
- Mount the camera in an area that is visible but out of reach.

Note
This camera is suitable for wall and ceiling mounting.

5.2 Extension Cables

- The included extension cable is 100ft (30m) long. If you are planning on extending the camera's video cabling beyond 100ft (30m), see 5.2.1 *Connection Diagram for Extending the Cables Beyond 100ft (30m)*, page 6.
- Because this is a high-powered PTZ camera, the power cable cannot be extended beyond 100ft (30m). You may connect the included power adapter directly to the camera's power connector and plug the adapter into a power outlet near the camera.
- The RS-485 wires on the camera cable are for service purposes only.
- You can extend the camera's video with a single cable run of up to 800ft (244m). Video quality may decrease if your extension cable is too long. For this setup, you must purchase a single run of RG59 coaxial extension

cable. It is recommended to use a video cable with the following specification: RG59U 95% Braid 20AWG or better.

Note
RG59 coaxial cable should be available from your local building supply store.

5.2.1 Connection Diagram for Extending the Cables Beyond 100ft (30m)

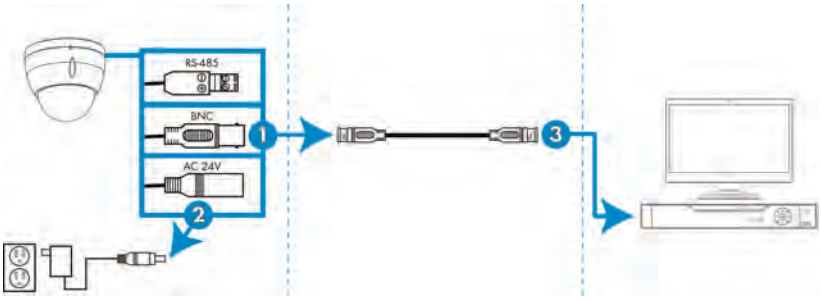

1. Connect the BNC video connector on the camera cable to a BNC extension cable up to 800ft (244m) long (not included).
2. Connect the female AC 24V power connector on the camera cable to the included power adapter. Connect the power adapter to a power outlet.

CAUTION

- Make sure to disconnect the power adapter before installing the camera. The camera will begin moving immediately when the power adapter is connected.
- Make sure to remove the foam ring inside the camera housing before powering the camera on for the first time. See 5.3 *Installation (Indoor/Outdoor)*, page 6 for details.

3. Connect the BNC extension cable to one of the **Video Input** ports on the DVR. Make note of the port number where you connect the camera, as it will be used when configuring the DVR to communicate with the camera.

5.3 Installation (Indoor/Outdoor)

⚠ CAUTION
Make sure to disconnect the power adapter before installing the camera. Camera will begin moving immediately when power adapter is connected.

To install the camera on a wall:

1. Mark holes for the mounting screws (x4) and cables through the wall mount bracket. Drill where marked.
2. Pull the cable from the DVR through the hole in the mounting surface.

3. Pull the cables through the wall mount bracket. Firmly attach the wall mount bracket to the wall using the included mounting screws (x4) and the included anchors (x4) if needed.

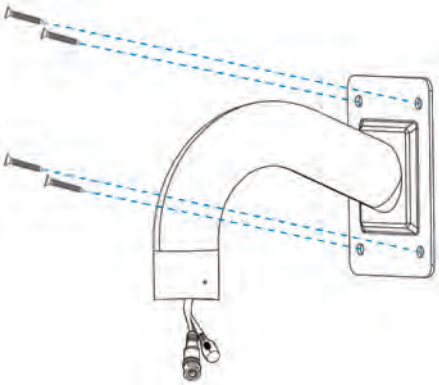

WARNING

Make sure to install the wall mount bracket in a location that can support the camera's weight. If mounting the camera on a drywall surface, you must drill at least 2 of the mounting screws through a wooden stud to ensure a stable mount. See the diagram below for details.

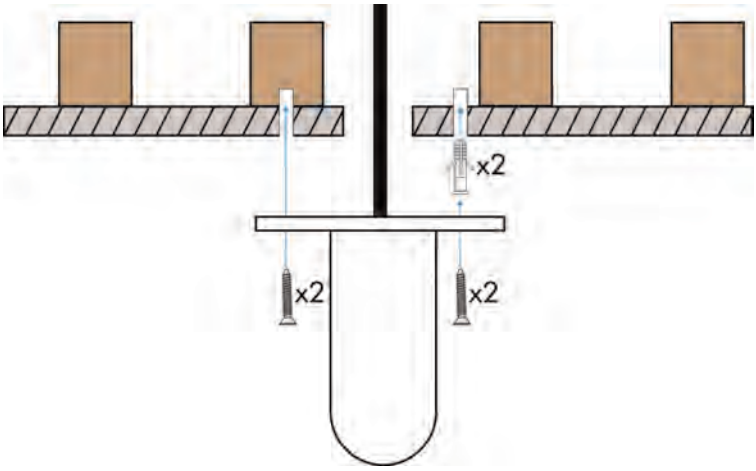

4. Remove plastic film from the screw holes on the bottom of the camera.

5. Use the included Allen key to loosen the dome cover screws (x3). Remove the dome cover.

6. Remove the foam ring* around the camera module.

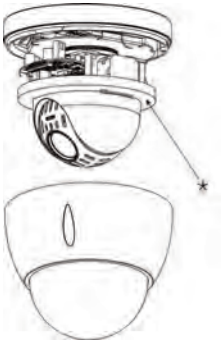

7. Pull the camera cables through the hole in the pendant cap. Use the included Allen bolts (x4) to attach the PTZ camera base firmly to the pendant cap. Tighten using the included Allen key.

8. Re-attach the dome cover, ensuring that the rubber O-ring around the camera base is in place and the alignment arrow* on the dome cover lines up with the camera base.

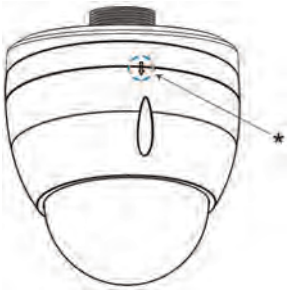

9. Tighten the dome cover screws (x3) using the included Allen key.

10. Loosen the security screw* on the wall mount bracket.

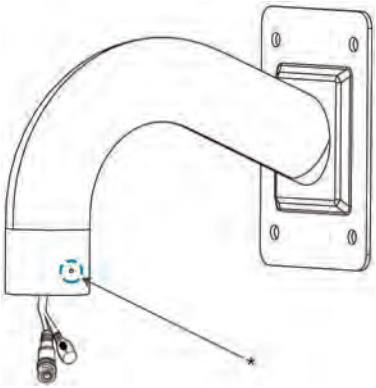

11. Connect the camera cables to the cable from the DVR. See 4 *Connecting the Camera*, page 4 for full connection instructions.
12. Twist the pendant cap onto the wall mount bracket. Tighten the security screw* on the wall mount bracket.

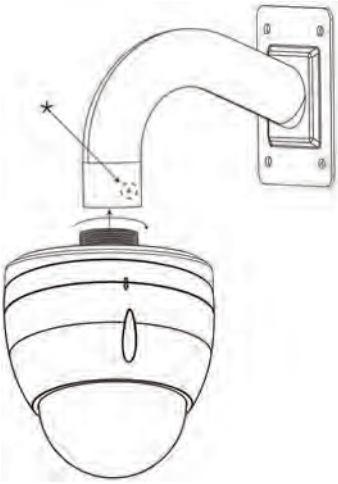

13. Remove protective vinyl sheet from the dome cover once installation is completed.

To install the camera on a ceiling:

1. Remove plastic film from the screw holes on the bottom of the camera.

2. Use the included mounting template to mark holes for the mounting screws and cables if needed. Drill where marked.

> **Note**
> If you run the cables along the mounting surface, you must run the cable through the cable notch on the base of the camera. This will keep the camera base flush to the surface when mounted.

3. Use the included Allen key to loosen the dome cover screws (x3). Remove the dome cover.

4. Remove the foam ring* around the camera module.

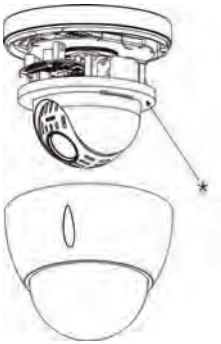

5. Push one of the included O-rings (x4) onto each of the included mounting screws (x4). Attach the PTZ camera firmly to the ceiling using the included mounting screws until the O-rings are flush against the camera base. Use the included anchors if needed.

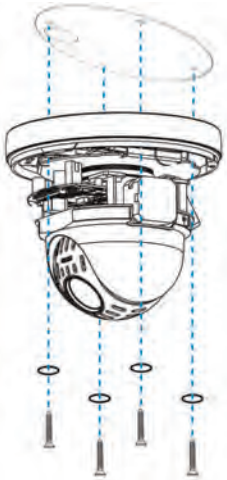

6. Re-attach the dome cover, ensuring that the rubber O-ring around the camera base is in place and the alignment arrow* on the dome cover lines up with the camera base.

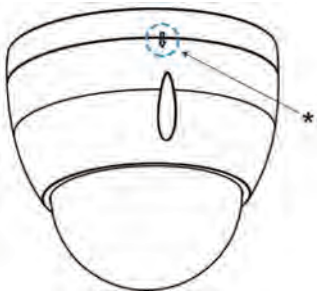

7. Tighten the dome cover screws (x3) using the included Allen key.
8. Remove protective vinyl sheet from the dome cover once installation is completed.

6 Controlling the PTZ Camera with your DVR

You can connect the PTZ camera to a DVR to control the camera's movement. The camera can accept PTZ commands directly through the video cable, so there is no need to run special wiring (for example, RS-485).

Note
For the latest list of compatible DVRs, please visit www.lorextechnology.com/support.

To connect the PTZ camera to a DVR:

1. Connect the camera video cable to one of the **Video IN** ports on the system.
2. Right-click and click **Main Menu**. Enter the system user name (default: **admin**) and password (default: **000000**) if prompted.
3. Click **>Setting>Pan/Tilt/Zoom**.

4. Under **Channel**, select the channel your PTZ camera is connected to.
5. Under **Control Mode**, select **HDCVI**.
6. Under **Protocol**, select **DH-SDI**.
7. Click **OK**. You can now control your PTZ camera using the system.

6.1 Controlling a PTZ Camera (Local DVR)

1. In Live View, double-click the channel that has the PTZ camera connected to open in full-screen.
2. Right-click and click **Pan/Tilt/Zoom**. Enter the system user name and password if prompted. The PTZ menu opens.

3. Use the on-screen PTZ controls to control the camera.

PTZ Controls

1. **Direction keys**: Click to pan and tilt the camera. Click **SIT** to stop the current action.
2. **Mouse PTZ**: Click to activate mouse PTZ mode. In mouse PTZ mode:
   - Click and drag to move the camera.
   - Use the scroll wheel to zoom in and out.
   - Right-click to exit and return to normal PTZ controls.
3. **Zoom / Focus / Iris**: Click +/- to adjust the zoom, focus, and iris.
4. **Advanced controls**: Click to open advanced PTZ controls.
5. **Speed**: Enter a PTZ speed from **1** (slowest) to **8** (fastest).

6.2 Advanced PTZ Controls

Advanced PTZ controls can be used to save camera positions and cycle through various positions, and automate camera actions.

To open advanced PTZ controls:

- Click the arrow in the PTZ control window to open advanced controls.

Advanced PTZ controls overview:

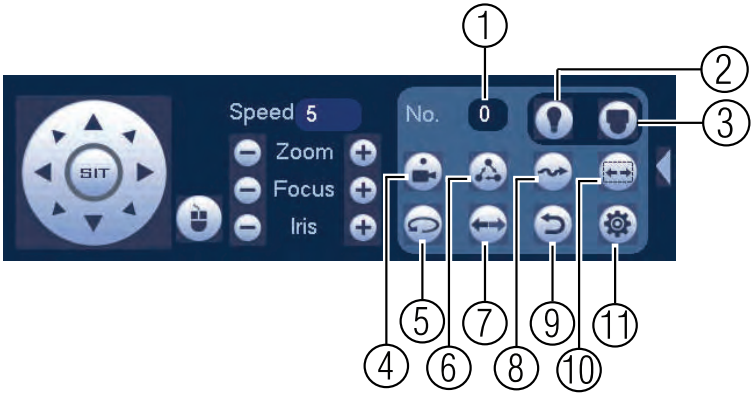

1. **No.**: Select the number of the action you want to perform.
2. **Not supported.**
3. **PTZ camera menu**: Click to open the camera's OSD menu. This menu is for advanced users only. For full instructions on using the OSD menu, visit www.lorextechnology.com to download the LZV1722 OSD Menu manual.
4. **Preset**: Click to move the camera to the selected preset location.
5. **Autopan**: Click to start autopan. During autopan, the camera will continuously pan 360°.
6. **Tour**: Click to run the selected tour.
7. **Flip**: Click to flip the camera 180°.
8. **Pattern**: Click to run the selected pattern.
9. **Reset**: Click to move the camera to the home position.
10. **Auto scan**: Click to run the selected autoscan.
11. **Aux**: Click to open the auxiliary menu, where you can set up Presets, Tours, Patterns, and Auto Scans.

6.2.1 Presets

Presets will save the camera's position for quick retrieval.

To add presets:

1. Click to open the aux menu.

2. Click the **Preset** tab.

3. Enter the number of the preset you want to create under **Preset**.
4. Move the camera to the desired position and click **Set**.

To go to a preset:

- Under **No.**, select the number of the preset you would like to go to and click .

6.2.2 Tours

Tours will cycle through a set of presets.

To create a tour:

1. Click to open the aux menu.
2. Click the **Tour** tab.

3. Under **Patrol No.**, select the tour you would like to configure.
4. Under **Preset**, select a preset you would like to add to the tour.
5. Click **Add Preset**.

6. Repeat steps 4 and 5 to add additional presets to the tour.

Note
Click **Del Tour** to clear all presets from a tour.

To run a tour:

- Under **No.**, select the number of the tour you would like to go to and click .

6.2.3 Pattern

Patterns automatically cycle the camera between two positions.

To create a pattern:

1. Click to open the aux menu.
2. Click the **Pattern** tab.

3. Under **Pattern**, enter the pattern you would like to configure.
4. Move the camera into the desired start position and click **Begin**.
5. Move the camera into the desired end position and click **End**.

To run a pattern:

- Under **No.**, select the number of the pattern you would like to go to and click .

6.2.4 Auto Scan

An auto scan automatically cycles between a left and right point.

To create a new auto scan:

1. Click to open the aux menu.
2. Click the **Border** tab.

3. Move the camera into the desired left position and click **Left**.
4. Move the camera into the desired right position and click **Right**.

To run an auto scan:

- Click .

7 Technical Specifications

Image Sensor	1/3" 1.3MP Sony Exmor[1]
Video Format	NTSC / PAL
Effective Pixels	1280(H) x 960 (V)
Resolution	Up to 720p (1280 x 720)
Range	360° Pan (Endless); -2–90° Tilt (Auto-Flip)
Speed	Max 300°/Sec (Pan); Max 200°/Sec (Tilt)
Zoom	12x Optical Zoom & 16x Digital Zoom
Protocol	DH-SD1, MPX CVI
Min. Illumination	0.1 Lux in Color; 0.01 Lux in Black and White
Lens / Lens Type	Auto Focus / 5–61mm F1.6
Field of View (Horizontal)	4.64–51.3°
Field of View (Diagonal)	6–64°
S / N Ratio	>55dB (AGC Off)
Scan System	Progressive
Synchronization	Internal
Iris	AES
Termination	BNC Video / AC Power / RS–485 (service only)
Video Output	Composite 1.0Vpp @ 75ohm
Power Requirement	24V AC ±10%
Power Consumption	Max. 500mA
Operating Temperature Range	14°F ~ 140°F / -10°C ~ 60°C
Operating Humidity Range	Within 90%RH
Indoor/Outdoor	Both (IP66)[2]
Weight (Camera & Wall Mount)	2.9lbs / 1.3kg

1. Compatible with Lorex HD DVR LHV1000 Series only.
2. Not intended for submersion in water. Installation in a sheltered location recommended.

7.1 Dimensions

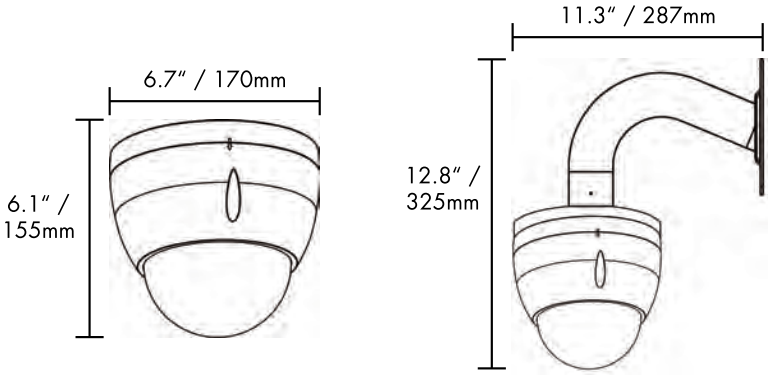

8 Troubleshooting

There is no picture at night.

- Camera is capable of seeing in extremely low light conditions (0.1 Lux), but it cannot see in total darkness. It is recommended to install the camera where there is some ambient light (for example: street lighting, starlight, moonlight, etc.) or leave a light on in the area where the camera is installed.

No image at startup.

- When the camera is first powered on, it performs a startup check. It may take up to 2 minutes after startup for the camera image to appear.
- Check to ensure your camera is properly connected (see 4 *Connecting the Camera*, page 4) and the power adapter is plugged in.
- Connect the power adapter to a different outlet.
- Make sure power adapter is the original one provided (24V AC). Do not use other power adapters with this product, as this will void the warranty.

No image or camera image is unclear.

- Dome cover is dirty. Clean the dome cover with a soft, slightly damp cloth. Do not use anything other than water to clean the dome cover, as chemicals such as acetone can permanently damage the plastic.
- Extension cable run may be too long (see 5.2 *Extension Cables*, page 5 for details).
- Voltage may drop over distance and affect image quality. The power adapter must be connected either at the end of the provided 100ft (30m) cable or directly to the camera cable.

Image is distorted.

- Image may become unclear when camera is tilted too close to the camera base (for example, pointed parallel to the ceiling). Tilt the camera using DVR PTZ controls.

PTZ controls are not working or are not working properly.

- Extension cables may be damaged or are not connected properly. Check your extension cable run.

DVR motion detection is constantly triggering.

- Turn off motion detection on the channel the PTZ camera is connected to. DVRs use video motion detection, which means they detect motion by

looking for changes between frames (images) in the video. If the camera is moving, the DVR will detect this as motion.

Website

www.lorextechnology.com

Copyright

© 2014, Lorex Corporation
All rights reserved worldwide. Names and marks appearing herein are either registered trademarks or trademarks of Lorex Corporation and/or its subsidiaries. All other trademarks, trade names or company names referenced herein are used for identification only and are the property of their respective owners.

Legal disclaimer

As our product is subject to continuous improvement, Lorex Corporation & subsidiaries reserve the right to modify product design, specifications & prices without notice and without incurring any obligation.E&OE.

Publ. No.: LX400025
Release: 1.0
Commit: 16122
Head: 16128
Language: en-US
Modified: 2014-08-01
Formatted: 2014-08-01