COLOR DIGITAL WIRELESS INDOOR/OUTDOOR ACCESSORY CAMERA

LW2201AC1 SERIES - QUICK START GUIDE

Before you install the camera, carefully plan where and how it will be positioned, and where you will route the cable that connects the camera to the power adaptor.

CONTENTS:

Digital Wireless Color Camera with Stand

Wireless Antenna for camera

Mounting Screws

Power Adaptor for camera*

Quick Start Guide

*May not be exactly as shown

INSTALLATION WARNINGS

- Aim the Cameras to best optimize the viewing area: Select a location for the camera that provides a clear view of the area you want to monitor, which is free from dust, and is not in line-of-sight to a strong light source or direct sunlight.
- Avoid installing the cameras where there are thick walls, obstructions, or interference (i.e. transformers, microwave ovens or other electrical equipment) between the Cameras and the Receiver.
- Select a location for the camera that has an ambient temperature between 14°F~122°F (-10°C~50°C)
- Before starting permanent installation, have another person hold the camera for you while you verify its performance by observing the image on a monitor.

INSTALLING THE CAMERA

1. Carefully unpack the Camera.

2. Mount the stand to the wall:

   - Mark the position of the screw holes on the wall.
   - Drill holes and insert the drywall plugs as needed.
   - Firmly attach the stand to the wall using the provided screws.

3. Attach the Antenna to the Camera prior to mounting.

4. Place the camera in the desired mounting position. Tighten the thumbscrews to secure the camera to the Stand. Adjust the angle of the camera until the desired view is set.

NOTE: AVOID INSTALLING IN A LOCATION WHICH REQUIRES THE WIRELESS SIGNAL TO PASS THROUGH CEMENT, CONCRETE AND METAL STRUCTURES. THIS WILL REDUCE THE TRANSMISSION RANGE.

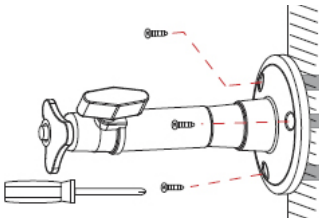

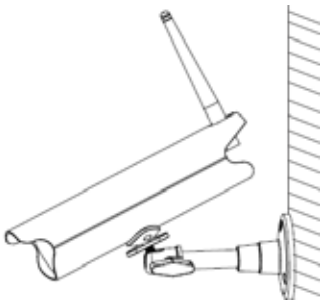

COLOR DIGITAL WIRELESS INDOOR/OUTDOOR ACCESSORY CAMERA

LW2201AC1 SERIES - QUICK START GUIDE

CONNECTING CAMERA POWER ADAPTOR

Connect one end of the camera Power Adaptor to the camera and the other end to an electrical outlet.

Connect power adaptor to local 120V AC power outlet

ADDING THE ACCESSORY CAMERA TO YOUR SYSTEM

The Pairing Function assigns each camera to a different channel on the wireless receiver (connect up to 4 Cameras), and is necessary for configuring additional cameras. By default the camera that came with the LW2201 system is assigned to channel no. 1.

NOTE: It is highly recommended to pair the Accessory Camera to the Receiver before permanently mounting the camera. For detailed information, please check the owners manual for the LW2201 system available at www.lorexcctv.com

1. Connect the power cable from the camera to the cable from the Power Adaptor; plug the Power Adaptor into an outlet or surge protector.
2. Press the Pair button repeatedly on the Wireless Receiver to select an empty channel.
3. Press and hold the Pair button for 5 seconds to activate pairing function. The on-screen displays informs you that you have 30 seconds to press the pair button on the camera*.
4. Press and hold the Yellow Pair button extending from the camera. You must press the Yellow Pair button from the camera within 30 seconds of pressing the Pair button on the Wireless Receiver. If pairing is successful, live video from the camera will immediately appear on the monitor.

* These are instructions for pairing with the LW2201 receiver. To add this accessory camera to a different Lorex Ultra Digital Wireless Receiver, check the Owner's manual for the receiver you have.

It's all on the Web

For detailed setup information, please refer to your User's Manual. For additional information, please visit our website **www.lorexcctv.com/support**