FLIR FX™

OUTDOOR WIRELESS HD VIDEO MONITORING

The **FLIR FX** Outdoor is a versatile wireless HD camera that allows you to keep an eye on the things that are important to you – anytime, any place. Monitor a package delivery to your doorstep, ensure your home is secure when you're away, or safely identify the source of that suspicious noise you heard outside at night.

SEE MORE. WATCH LESS – RapidRecap™

Review the day in a minute by watching cloud-recorded events simultaneously.

- Pick the time frame to review, and RapidRecap* will compile events into condensed video clips
- Spend less time reviewing videos
- Easily share downloaded videos with friends

KEEP AN EYE ON WHAT MATTERS MOST – SmartZone™

Recordings and alerts happen only in your specified area with motion sensing technology.

- Using the FLIR FX app, you select the areas you want to monitor
- When an object moves inside the SmartZone area, you will receive a notification on your smartphone or tablet, and the camera will record
- SmartZone is designed to reduce unwanted motion triggers in areas you're not worried about

ANYWHERE, ANY PLACE – Outdoor

Records 1080p to an included on-board microSD card.

- Infrared illumination to see up to 65 feet at night
- Weatherproof IP-67 housing
- Two-hour backup battery ensures coverage during power outages

*Cloud subscription required, 30-day free trial included

Imaging Specifications

System Overview	FLIR FX
Image Sensor	4MP, 1/3" CMOS
Resolution	Up to 1920 x 1080 (1080p)
Frame Rate	Up to 30fps
Compression	H.264
Lens	2.45 mm @ f/2.5
Field of View	Up to 160° horizontal video dewarping
WiFi	2.4GHz 802.11 b/g/n
Apps	iOS®, Android™
MicroSD	8GB to 64GB microSDHC or microSDXC supported, class 10 or higher
Microphone	Yes
Speaker	Yes
Battery – Camera Only	1130mAh
Battery Life – Camera Only*	Up to 2 hours battery backup
Dimensions – Camera Only*	2.0" / 1.2" / 2.3" (51mm / 31mm / 59mm)
Weight – Camera Only	0.2lb / 0.08kg
Operating Temperature	0 ~ 104°F / 0 ~ 40°C
Outdoor Stand Specs:	
Night Vision LEDs	2 IR LEDs in housing
Night Vision Range	65 ft (20 m)
Power Adapter	12 V / 10 A
Mounting	Wall or Ceiling w/ cable pass-through
Environmental	Weatherproof (IP-67)
Dimensions – Camera with Stand	2.7" / 2.3" / 4.7" (70mm / 60mm / 121mm)

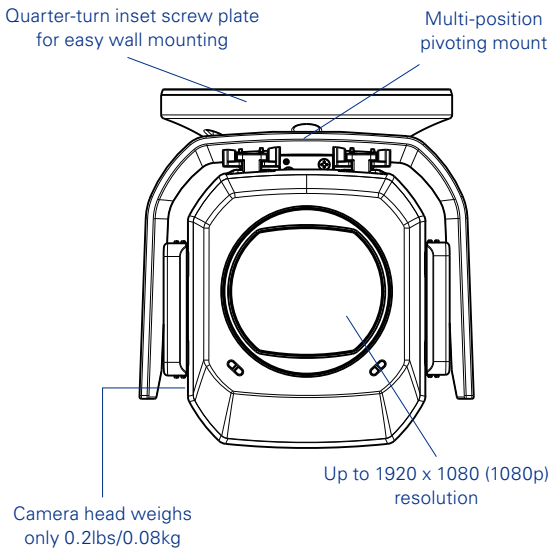

PORTLAND
Corporate Headquarters
FLIR Systems, Inc.
27700 SW Parkway Ave.
Wilsonville, OR 97070
USA
PH: +1 866.477.3687

SANTA BARBARA
FLIR Systems, Inc.
70 Castilian Drive
Goleta, CA 93117
USA
PH: +1 805.690.5097

CANADA
FLIR Systems, Ltd.
250 Royal Crest Court,
Markham, Ontario
L3R 3S1 Canada
PH: +1 905.946.8589

BALTIMORE
901 Elkridge Landing RD
Linthicum, MD 21090
USA
PH: +1 410.525.1902

www.flir.com
NASDAQ: FLIR

Equipment described herein may require US Government authorization for export purposes. Diversion contrary to US law is prohibited. Imagery for illustration purposes only. Specifications are subject to change without notice. ©2014 FLIR Systems, Inc. All rights reserved. (Created 12/14)